MC0283

Department of Health
and Social Security

Welsh Office

HMSO £4.95 net

HEALTH TECHNICAL MEMORANDUM

FIRE SAFETY IN HEALTH CARE PREMISES
Fire Alarm and Detection Systems

82

Fire Safety in Health Care Premises
Fire Alarm and Detection Systems

Contents

1 **Introduction**

1.1 Scope and Purpose 3
1.2 Application of the Document 3
1.3 Relationship with British Standards 3
1.4 Function of Fire Alarms in Health Buildings 3

2 **General Design Consideration**

2.1 General 3
2.2 Fire Zones 3
2.3 Time to locate the origin of the Alarm 4

3 **Communication links with the fire brigade** 4

4 **Alarms**

4.1 Audible alarms 5
4.2 Visual alarms 6

5 **Trigger devices**

5.1 Manual call points 6
5.2 Automatic detectors 7

5.2.1 General Characteristics 7
5.2.7 Design Considerations 8
5.2.13 Performance and Reliability of Detectors 9
5.2.14 Choice of Fire Detectors 9
5.2.20 Siting of Detectors 11
5.2.24 False Alarms 11

6 **Control and Indicating Equipment**

6.1 Control Equipment 12

6.1.1 General 12
6.1.3 Zone Modules and Detector Types 12
6.1.4 Fault Warning 12
6.1.8 Indicators 12
6.1.11 Control Functions 13
6.1.13 Testing 13
6.1.15 Alarm Sounder Silencing 13
6.1.17 Signal to remote manned centre 13
6.1.19 Alarm Indication on Systems with Central Equipment 13
6.1.20 Fault Warning on Systems with Central Equipment 13
6.1.21 Slave Panels 13

6.2 Power Supply 13

6.2.1 General Requirements 13
6.2.3 Performance of Batteries and Chargers in Fire Alarm Systems 14
6.2.5 Construction 14
6.2.8 Special Control Equipment 14
6.2.8 Time Division Multiplex 14
6.2.10 Two Wire 14
6.2.11 Microprocessor Technology 14

6.3 Cables and Wiring 14

7 **Installation and Commissioning**

7.1 HTM No 17 15
7.2 Commissioning 15
7.7 Log Book 15
7.8 Inspection of Installation 15
7.9 Insulation of Cables and Wiring 15
7.10 Earthing Tests 15
7.11 Initial Operation Test 15
7.12 Full Operational and Commissioning Tests 16

8 **Testing and routine maintenance**

8.1 General 16
8.4 Routine Procedures 16
8.5 Alarm testing 17
8.8 Control Equipment 17
8.9 Duration of Stand-by Supplies 17
8.10 Battery Maintenance 17
8.14 Battery Charging Equipment 17
8.15 Battery Rooms/Cubicles 17
8.16 Fire Detectors, Manual Call Points and Other Trigger Devices 17
8.16 Smoke Detectors 17

8.17	Heat Detectors	18
8.19	Beam Detectors	18
8.20	Manual Call Points	18
8.21	Cleaning of Smoke Detectors	18
8.22	Cleaning Photo-electric Light Scatter Detectors	18
8.23	Cleaning Ionisation Detectors	18
8.29	Spares	18
8.30	Disposal of Ionisation Detectors	19

APPENDICES

1	Fire Alarm Circuits	20
2	Technical Details of Components	26
3	Mode of Operation of a Typical Hospital Alarm System	31
4	Time Division Multiplex Fire Alarm Systems	33
5	Acoustic Recommendations for Audible Fire Alarms	39
6	Bibliography	41
7	Relevant British Standards	42

INDEX 43

1 Introduction

Scope and Purpose of Document

1.1 This Technical Memorandum gives the general principles and technical guidance to those in the Health Service who have responsibility for design, specification, commissioning, testing, operation and maintenance of fire alarm systems in health buildings. It replaces the relevant sections of HTM 16 and of Dear Secretary letter DS273 of 9 November 1973. It should be read in conjunction with the relevant sections of Fire Safety in Health Care Premises — Planning and Design of New Buildings, Health Technical Memorandum No 81 and in conjunction with BS 5839 Fire Detection and Alarm Systems in Buildings, Part I Code of Practice for Installation and Servicing. The appendices of this HTM provide reference material which is not readily available elsewhere in a single document.

Application of the Document

1.2 This guidance applies to all new health buildings where HTM81 is applicable or major extensions, or alterations, to fire alarm systems in existing health buildings.

Relationship with British Standards

1.3 The British Standards which are relevant to fire detection and alarm systems are listed in Appendix 7. These Standards deal with systems generally rather than specifically with their application to health buildings. Therefore in some instances the full standard is not appropriate to health buildings. This Memorandum complements the British Standards by amplifying specific aspects and providing, where necessary, recommendations which replace British Standard clauses with ones appropriate to the particular needs of health buildings. Clauses not specifically mentioned apply in full. References made to British Standard clauses indicate that:–

1.3.1 the BS clause is either not applicable or only partly applicable to health buildings and the appropriate guidance is contained in this memorandum, or

1.3.2 the BS allows the selection of options, the option applicable to health buildings is given in this Memorandum.

Function of Fire Alarms in Health Buildings

BS 5839 Part I para 9.11

1.4 The function of fire alarms in health buildings is to give warning to staff in the event of fire so that an early call to the Fire Brigade, first aid fire-fighting and evacuation may be carried out. Unlike most other types of buildings it is not necessary or even desirable to give warning to all the occupants.

BS 5839 Part I para 4.1

1.5 The effectiveness of a fire alarm system is only as good as the total fire precautions system of which it forms a part, and the designer or specifier of a fire alarm system should work in close liaison with those concerned with planning, and administration of fire precautions, ie, works officers, administrators, doctors, nurses, and fire officers.

2 General design considerations

General

2.1 Before starting to design a fire alarm system the following basic essentials must be considered:

BS 5839 Part I para 6

a. the location of the fire alarm panel should be in a situation which is manned 24 hours each day and in general at entrance level. This, typically, could be a telephone exchange or a continuously manned reception. Where this is impracticable the panel should be mounted where there is maximum supervision and in that event should provide for audible and unmistakable alarms in various areas of the premises to give warning that an alarm has been raised.

b. the immediate information required when an alarm is raised is the accurate location of the origin of the alarm.

c. on raising an alarm, the sounders are to sound automatically.

BS 5839 Part I para 9.12

d. sounders are to be positioned where they will not cause undue distress to patients and staff. Efficient but safe silencing facilities should be provided on the main control panel, that can only be operated by authorised members of staff.

e. facilities will be required for the Fire Alarm System to actuate other equipment such as automatic door closers.

BS 5839 Part I para 9.12

f. a facility should also be provided to operate sounders manually from the Fire Alarm Panel.

g. staff elsewhere may need to be alerted.

Fire Zones

BS 5839 Part I Paras 7,3.8

2.2 Each building (except for the very small build-

ings) will be divided into fire alarm zones (a zone is defined in BS 5839 Part I para 3.8). The fire alarm zones should be co-terminous with the structural fire compartments or sub-compartments and should never overlap from one structural fire compartment or sub-compartment to another. The size of fire alarm zones is determined at the design stage by factors such as:

a. the type and complexity of building, eg ward block, offices etc.

b. the expected minimum number of staff on duty.

c. the number of patients that would need to be evacuated.

d. the likely degree of mobility of the patient.

e. size of compartments; there may be more than one fire alarm zone per building fire compartment.

f. the size of the control equipment.

Time to locate the origin of the Alarm

2.3 The time to locate the origin of the alarm is of critical importance, especially in patient areas with low staff to patient ratios. The size of the fire alarm zones is the chief factor affecting this time. Provision of indicator lamps both on or extended from automatic detectors, also assists the discovery of fires. The cost of the system increases with the number of zones. Therefore it is essential to obtain a realistic value for the time to locate the origin of the alarm. So though ideally each nursing section and department should be a separate fire zone this may not be economically possible. A fire zone covering nursing sections should not contain more than 60 patients.

3 Communication links with the Fire Brigade

BS 5839 Part I Para 8

3.1 Of the methods of communication with the Fire Brigade listed in Table 1, the direct link over private telephone lines is the most reliable. However few brigades now accept such links partly due to the adoption of central mobilisation. The use of VF System "A" overcomes the latter difficulty, but it is less reliable and it may not be available in some areas due to the shortage of channels.

3.2 Of the indirect methods of communication the use of a private telephone line link to a Commercial Central Station is usually the most satisfactory, particularly if the Station is listed[1] by the Fire Offices' Committee as an Approved Central Fire Alarm Depot.

3.3 The ABC System (Alarm by Carrier) superimposes signals onto the normal telephone lines to the local exchange where they are fed into special equipment for transmission over protected circuits to a central receiver. A signal is transmitted to indicate fault conditions, but since there is no unique path for the signals it cannot be tested as when a private telephone line is used. When the display point is within Fire Brigade premises each signal follows a unique path and there is no technical reason why the system should not be tested.

3.4 The 999 system is engineered to guard against failure to receive an emergency call. However the system may sometimes become saturated, eg after a major incident such as an aircraft or train crash, or it may become blocked occasionally in certain areas due to the use of local dialling codes starting with 9 or 99.

3.5 The Public Switched Telephone Network sometimes becomes congested in places and is subject to equipment failure thus limiting the reliability of any communication system using it. However such a system may be the only economic automatic type available in some locations. It is necessary to investigate locally the telephone traffic conditions to ascertain whether or not this method of communication with the Fire Brigade is feasible.

1. Rules of Fire Offices Committee for Automatic Fire Alarm Installations. List of Approved Central Alarm Departments. Published by the Fire Offices' Committee, Aldermary House, Queen Street, London EC4P 4JD.

Table 1 — Communication Links with the Fire Brigade

Communication Route to Fire Brigade	Type of Link	Advantages	Disadvantages
Direct	Private PO line	No delay. Minimum of human intervention. Complete signal path can be tested.	Long lines are expensive. Unacceptable by many Fire Brigades due to time required for testing and advising fault warnings.
	Private PO line feeding into VF 'System A' (see note a)	Relatively short lines. Minimum of human intervention.	Delays occur if an equipment receives more than one call simultaneously. Mechanical relay equipment limits reliability.
via PO operator	Manual 999	Cheap. Receipt of an alarm is confirmed by the Fire Brigade to the caller.	Requires a continuously manned centre at the protected premises. Subject to error by inexperienced staff.
	Autodialler 999	Cheap	Mechanical relay equipment limits reliability. Intelligibility of message depends on quality of line in public telephone network.
Direct or via PO operator	ABC (Alarms by carrier) (see note b)	Uses existing PO lines but not the normal exchange switchgear.	Delays are possible if a PO operator has to handle several calls simultaneously (not applicable if calls are automatically relayed to equipment at Fire Brigade control rooms).
via Central Station Operator	Private PO line to central alarm station	Line cost reduced when coded signalling used and facilities shared with intruder alarm systems.	Relies on the integrity of a commercial organisation. Delays will occur unless there are proper communication links to the Fire Brigade from the Central Station.
	Public switched telephone network (see note c)	Economical	As above, also depends on the reliability of the public switched telephone network.

Notes to Table 1

a. VF "System A" is a voice frequency remote control and communications system produced for the fire service where underlying arrangements are centralized. A signal from fire alarm equipment at the protected premises is sent to equipment at the local fire station and triggers the playing of a recorded message over VF "System A" to the remote Fire Brigade control. This system is gradually being phased out.

b. Coded signals from fire alarm equipment at the protected premises are sent over existing telephone lines to the local exchange where they feed into a multiplex system. The signals are received at a central exchange and then delivered to action points which may be at exchanges or at Fire Brigade controls.

c. Coded signals from fire alarm equipment at the protected premises would be sent over the public telephone network to an automatically dialled control station.

4 Alarms

4.1 Audible Alarms

BS 5839 Part I para 9

4.1.1 The general policy in the Health Service is that the staff, not the patients, are the people who need to be alerted when the fire alarm operates, because the staff are responsible for taking the initial action in fighting the fire and in moving patients away from it. It is essential that staff are alerted immediately, so that all necessary personnel are made available to assist at the fire. If the buildings are in discrete blocks widely distributed over a site then the alarm need only sound in those blocks which are at risk or where essential personnel are situated.

4.1.2 It is undesirable to have patients disturbed by loud noise when the fire alarm operates because:-

a. some may be critically ill and may be affected by the noise.

b. some may be thrown into confusion and panic.

It has been argued that a loud noise with the consequential risk to a patient's health is justified under a fire condition. However this argument cannot be applied when the sounders are being tested.

BS 5839 Part I paras 9.10 and 9.5

4.1.3 In hospitals having more than one zone, a two stage alarm will be provided giving a continuous signal in the zone of the fire and initially only an intermittent signal elsewhere.

4.1.4 Frequently the sounders in one fire alarm zone can be heard in another, therefore in the 2 stage alarm system it is important that the "alert" signal in one zone (intermittent note) cannot confuse the "evacuate" signal (continuous note) in the zone of the fire. In practice this confusion has been found to occur when warblers have been used for "alert" signals instead of distinct pulses. Hence the use of warblers is not recommended.

4.1.5 Consideration should be given to the use of electronic sounders and flashing light/audible units, in preference to bells, primarily because bells are used for other purposes.

BS 5839 Part I para 9.12

4.1.6 Whilst there are arguments in favour of automatic silencing of alarms after a given time interval, most notably, the interference to communication which may otherwise result, automatic silencing is not recommended. The problem of interference with communication can generally be dealt with by the correct choice of sound pressure levels as outlined in Appendix 5.

4.1.7 Appendix 5 deals with the Acoustic and Sound level Recommendations for Audible Fire Alarms but the following comments are included to draw attention to some common practical problems:-

a. in designing fire alarm systems for new buildings it is unrealistic to try to measure the notional level because, at that time, the state of the buildings at best would be but an empty shell. The design should therefore be based on the notional levels listed in Appendix 5. During the commissioning tests it is probable that the building will be empty and therefore it will be necessary to take a final set of sound level measurements after the building is occupied and in use. It may not be reasonably practicable to meet the recommendations of Appendix 5 in all spaces.

b. in designing a fire alarm system for an existing building, notional levels can be measured, because the building is already there, furnished and occupied. However, in practice it is often less costly to minimise the amount of sound level testing before design and adjust the sound levels during commissioning, if necessary changing some of the sounders to make them more powerful or less powerful as required.

c. the mounting height of sounders is important. Sounders will be muffled if mounted too close to the ceiling. In general a minimum of 600mm below the ceiling is recommended.

d. it is recommended that the manufacturer should be consulted on sounder positions before finalising drawings for a scheme.

e. variations in environmental noise should be considered for example in residential accommodation. It is often discovered during testing, that while the sounders are adequate to waken the sleeping staff at night or during most of the day, there are times when the noise from radios and record players is difficult to overcome.

4.2 Visual Alarms

BS5839 Part I para 9.8

4.2.1 Visual signals, generally flashing light units, should be provided in areas where normal alarm sounders are unacceptable. Examples are operating theatres, ITUs, treatment rooms and animal houses. It should be possible to supplement the flashing light with a buzzer of low sound level as part of a lamp/buzzer unit or to provide a sounder external to the critical space.

5 Trigger Devices

5.1 Manual call points

BS 5839 Part I para 10

5.1.1 The use of telephones as call points is no longer recommended; the wiring of a telephone system will not generally conform to BS 5839 Part I. Even an easily remembered code has been shown to be frequently misdialled in a real fire situation; generally the number of extra telephones required is such that the system is more expensive than a break glass system.

BS 5364 Part I (being revised as BS 5839 Part XXX)

5.1.2 The two types of break glass units available are:-

a. impact types (operated by a striker)

b. steady force types (operated by pressing firmly with the thumb)

5.1.3 A call point of Type b. or one that can be broken with relative ease without the use of a striker is

preferred for health building use since it avoids the operators cutting themselves in the event of the striker being missing from the unit, and also prevents injury caused by glass fragments.

5.1.4 Weather proof type units are available for installing outdoors.

5.1.5 There are still available key operated manual call units but these are no longer recommended for use in hospitals. They were originally used in some hospitals to reduce the possibility of patient interference. The possible loss of keys is considered a greater hazard than the use of the conventional break glass unit.

BS 5839 Part I para 10.1

5.1.6 Manual call points should be located so that they are readily accessible on escape routes. In nursing sections a manual call point should be provided near the Nurse Base. Additional call points may be required to ensure that no person need travel more than 30m from any position within the building to raise the alarm. As delay in raising the alarm can be critical, in patient and other high risk areas a distance of less than 30m may be desirable.

5.2 Automatic Detectors

General Characteristics

BS 5839 Part I paras 11, 12, 13

5.2.1 A summary of the characteristics of the main type of fire detector is given in Table 2. Rate of rise of temperature heat detectors usually incorporate a fixed temperature element. Some models of smoke detector, especially those of the optical scattering type, incorporate a fixed temperature element.

5.2.2 The sensitivity of a detector to a fire which it is designed to sense may depend on factors such as: air temperature, humidity and velocity; supply voltage; building vibrations. To be satisfactory a detector must have a sensitivity high enough to respond to smoke or fire well before it reaches a dangerous condition, but the sensitivity of a detector must not be so high that there is an unacceptable probability of false alarm occurring under those conditions which normally prevail near to the detector. All the above considerations will have been taken into account in the design of detectors which conform to an appropriate standard viz: BS 5445: Part 5 for heat detectors, BS 5446: Part I for smoke detectors for use in residential premises, and the European insurance (CEA) standard for smoke detectors.

BS 5839 Part I para 12.2.10

5.2.3 BS 5445: Part 5 specifies three grades of heat detector according to their sensitivity to fire conditions as represented by tests over a range of rates of rise of air temperature. BS 5839 specifies the maximum ceiling height appropriate to each grade and gives guidance on siting, spacing etc.

5.2.4 BS 5445: Part 5 applies both to fixed temperature detectors having a rate of rise of temperature characteristic and to those without such a characteristic. It does not differentiate between them because in general either would be satisfactory. As indicated in Table 2, one version has advantages over the other for

Table 2 Performance of Detectors

Type of detector	Comparison of types	Principle of operation	Advantages	Disadvantages
HEAT	General purpose detection Less likely to give false alarms than smoke detectors.	Fixed temperature (static detectors)	Less likely to give false alarms where large temperature variations occur eg kitchens, laudries.	Slow response in low ambient temperatures.
		Rate of rise of temperature See para 5.2.3	May respond more quickly than fixed temperature detectors where the ambient temperatures are low	Must contain a fixed temperature element (BS 5445 part 5).
SMOKE	General purpose detection. Detects smoke-producing fires at an earlier stage than heat detectors.	Ionisation chamber	Very sensitive to smoke with small particles, eg fresh cellulosic smoke.	Insensitive to smoke with large particles, eg plastics or stale smoke.
		Optical	Sensitive to optically dense smoke, ie smoke with large particles.	Insensitive to optically thin smoke.
FLAME	Special purpose detection, eg liquid fuel and outdoor fires. Line of sight operation	Infra red		
		Ultra violet		
HEAT THERMAL TURBULENCE DETECTOR	At present is only found incorporated into long-beam smoke detectors; it is then suitable for general use	Optical, detects hot air currents	Covers large area	Unsuitable for general use unless smoke detection facilities are incorporated.

particular applications. However, the effectiveness of the rate of rise characteristic in a particular model of detector can be determined only from the results of suitable tests. Most detectors with mechanical heat sensing elements have very limited characteristics.

5.2.5 The above standards only apply to point type detectors; other configurations are available as shown in Table 3. The choice of configuration is largely dependent on installation and maintenance costs provided the performance of the detector considered is shown to be satisfactory.

Table 3 Classification of Detectors

Detector arrangement	Responsive to	Designation Number	Area of operation or effectiveness of the detector
Point	Heat Smoke Radiation (flame)	(1) (2) (3)	Within the range of a fixed point sensor forming part of the detector.
Line	Heat	(4)	(4A) In vicinity of a sensor in the form of a cable. (4B) In the vicinity of a light beam produced by a thermal turbulence detector.
	Smoke	(5)	In the vicinity of a light beam produced by an obscuration detector.
Sampling	Smoke	(6)	In the vicinity of a number of fixed points. (Samples are drawn into a sensor, in turn or simultaneously, from each point).

5.2.6 Other aspects of detector design are outside the scope of the above standards for example:-

a. detectors which cannot be reset – the method used for replacement.

b. detectors which can be reset – the means used for resetting.

c. the provision of an indicator lamp on the detector or its base.

d. whether the detector has terminals for direct connection to the system wiring or it is designed to be attached to a base having such terminals.

e. ease of testing, maintenance and servicing.

Design Considerations

5.2.7 Most types of detector which contain a fusible element cannot be reset, nor can they be fully tested for operation — although some testing, with care, is normally possible on a detector which also contains a non-fusible sensing element. The choice between fusible element types and those which can be reset is largely an economic one (based on an estimated probability of operation) provided that data shows that the operating characteristic of the detector is sufficiently stable over many years.

5.2.8 If a detector has not been damaged by fire it may be reset after operation, when the fire conditions have subsided, by the means provided: — Manual or automatic returning of a mechanism to normal or operation of a reset switch on the control and indication equipment. If the latter conforms to BS 3116: Part 4, it will continue to indicate an alarm until the system is reset even if the detectors used are self resetting, and even if the detector lines become damaged by fire. From the testing and resetting aspects, the use of a self resetting detector is as satisfactory as one that requires electrical resetting. The self resetting type may be simpler electrically, and therefore more reliable.

5.2.9 An indicator lamp may be fitted to a detector or its base to aid in locating the origin of an alarm and, hence, in identifying its cause. To achieve these purposes the lamp must continue indicating until reset manually. Such a lamp may also be useful in testing detectors in situ.

5.2.10 In some designs of detector a lamp is arranged to flash during normal operation. This indicates that power is being supplied to the detector and may show the state of the chamber in an ionisation chamber smoke detector (ie indicating whether the detector is functioning correctly or needs cleaning) or, in optical scatter detectors, it may indicate operation of the lamp in the smoke chamber.

5.2.11 Detectors designed to be connected directly to the system wiring will be economic only if their disconnection is not regularly required for maintenance purposes. They include some heat detectors of the fusible element type; those which do not require cleaning because the heat sensitive element is shielded from the atmosphere, and either their sensitivity is not

too affected by corrosion or they are to be located where only a slight degree of corrosion will occur; and other detectors for which it can be shown that cleaning should not be required for many years.

5.2.12 Detectors having their sensitive element exposed to the atmosphere, such as point type smoke detectors, require regular cleaning which usually involves removal of the detector from the system. Such removal is greatly simplified by using detectors which are plugged into a base. It is even simpler when the detector is designed to be detached from its base by means of a tool at the end of a pole, the tool being operated by a person standing on the floor. The detector base wiring in a two wire monitored circuit is often arranged so that removal of a detector initiates a fault warning at the Control and Indicating Equipment. With some models, detectors connected to lines beyond the detached detector do not then receive power. The fault warning given cannot be reset until the detector lines are restored to normal. With models of detector which, on removal interrupt the continuity of the lines only momentarily, the fault warning can usually be reset whilst a detector remains out of circuit. Such systems are not considered acceptable.

Performance and reliability of detectors

5.2.13 The most satisfactory indication that a detector is designed to perform adequately and reliably is its compliance with the latest British Standards.

Choice of Fire Detectors

5.2.14 Smoke detectors of either ionisation or light scatter type are recommended in certain nursing sections and other patient areas listed in table 4 because of the need for the earliest possible detection for life safety purposes. Furthermore, in such areas, there is not the high risk of false alarm from processes being carried out as might occur, for example in a kitchen. The coverage is higher than that recommended in BS 5839. Where practicable a mixing of ionisation and light scatter detectors is recommended in the nursing sections listed in table 4. This does not mean the duplication of detectors. If only one detector is to be installed it should be an ionisation type since the majority of nursing section fires give rise to flame in the early stages. In other areas the type of fire risk must be taken into account. It has been found that ionisation detectors do not respond to slowly smouldering fires. This is due to the large size of particles produced. On the other hand the response of light scatter detectors to black smoke is reduced compared with their response to lighter coloured smoke due to less light scatter taking place. A mixture of the two types of detectors in a given area will mitigate those problems. It is anticipated that a single head combining both ionisation and light-scatter detection will become available in the future and subject to performance, cost and reliability these may be used. Optical beam detectors respond to both light and dark smoke and may detect heat. It is this latter feature which may cause false alarms if they are used over plant emitting heat which produces a "heat shimmer". They are ideal for covering large areas if the environment is suitable.

5.2.15 The use of smoke detectors in stores, laundries and other Central Service Departments again arises from the need for the earliest possible warning. The hospital service may depend vitally on these Departments. If, however, early warning is to be effective in saving property in these areas then it is vital that warning is given when a fire is small so that it can easily be put out. In cases when the use of smoke detectors would give rise to a high rate of false alarms e.g. in laundries with old equipment, it may be necessary to use heat detectors. Whilst point smoke detectors cost about twice as much, installed, as point-type heat detectors the area covered is twice as great and therefore the cost per unit area is roughly the same. The use of smoke detectors in laundries is controversial due to the possibility of false alarms arising from condensing steam. In modern laundries smoke detectors have not been found to give rise to false alarm problems. Large lofty spaces, e.g. laundries, Central Sterile Supply Departments, stores and concert halls may be suited to the use of optical beam detectors. The use of such detectors can result in cost savings, particularly on maintenance, as well as a higher standard of coverage.

5.2.16 The use of heat detectors is recommended in those areas where the processes being undertaken might give rise to a high rate of false alarms if smoke detectors were provided. Whilst in many instances the use of point heat detectors is appropriate, the use of line detectors may well be more economical in large undivided areas.

5.2.17 An optical beam detector has a performance which relates directly to visibility. Therefore it has a potential use as a detector in escape routes.

5.2.18 Table 4 is not exhaustive. It is impossible to be completely comprehensive in a check list of this kind but some general guidelines can be given by way of amplification. The cut off point for kitchens should generally be taken as the main kitchen. Small ward kitchens, not involved in the preparation of meals, do not require automatic detection. For automatic detection purposes, stores do not include small ward stores, except linen rooms. In high risk areas such as long-stay nursing sections, laundries etc, small low risk rooms such as offices need not be covered. Smoke detectors may be required in staff residences if structural fire precautions or means of escape are inadequate and structural alteration is impracticable. This also applies to underground service ducts if means of escape are inadequate.

5.2.19 Detectors may be required in other areas such as voids and plant rooms, where a high fire risk is situated adjacent to areas of high life risk, or in areas where unusually expensive equipment is housed.

Table 4 Areas where Automatic Detectors are recommended

BS5839 Part 1
Paras 12 and 13

DEPARTMENT	AREA	TYPE OF DETECTOR AND DESIGNATION CODE (see table 3)
The following Nursing Sections: Geriatric Mental Illness Mental handicap Young severely handicapped Orthopaedic	Patient Sleeping Area Day Spaces	Smoke (2) or (6)
X-Ray	Records Used Film Store	Smoke (2)
	Chemical Store	Heat (1)
Accident and Emergency	Main Store	Smoke (2)
Pathology	All Areas except Offices, Toilets	Heat (1)
Out-patient Dept	Medical Records Pathology Laboratory	Smoke (2) Heat (1)
Physiotherapy	Wax Bath Room	Heat (1)
Pharmaceutical Department	Dispensing Area Store	Heat (1)
Occupational Therapy	Heavy Workshop Light Workshop Domestic Section (excluding Kitchen) Stores*	Smoke (2)
	Kitchen*	Heat (1)
Administration	Library Stores* Records Computer Suites Staff Common Rooms	Smoke (2)
Patient Services Records	Record Store	Smoke (2)
Education	Common Rooms Lecture Rooms for more than 50 people Library	Smoke (2)
Staff Changing	Open Clothes, Hanging Area	Smoke (2)
Central Sterile Supply Department Hospital Sterilizing and Disinfecting Unit	Bulk Store Linen Store Work Packing and Autoclave Room Sterile Store* Staff Changing (if storage of clothes on open racks)	Smoke (2) or (5)
Catering	Kitchen*	Heat (1) or (4A)
	Large Dining Rooms for more than 50 places	Smoke (2)

* See 5.2.18

Table 4 Continued

DEPARTMENT	AREA	TYPE OF DETECTOR AND DESIGNATION CODE
Central and Bulk Stores	Store Rooms*	Smoke (2) or (5)
Laundry	All Areas	Smoke (2), (5) Heat (1), (4A) as appropriate
Works Department and Services	Carpenters Shop Timber Store	Smoke (2)
	Flammable Liquid Store (eg paint)	Smoke (2)
	Boiler Room forming part of another building or partially attended or unattended Boiler Rooms and Main Boiler Houses	Heat (1)
	Gas Cylinder Room where Cylinder Room is within another building**	Heat (1)
	Switch Room with oil filled switch gear	Heat (1)
	Emergency Generator Room when part of another building** or when oil is stored in bulk	Heat (1)
Linen and Refuse Chamber and Disposal Area	Refuse Chutes Refuse Chamber Incinerator Room	Heat (1)
All Departments	Escape Routes where automatic door holders are provided and the adjacent Departments themselves are not adequately covered by smoke detectors	Smoke (2) or (5) (If installed in a corridor the detector should be an optical type)

* See 5.2.18
** Where that building contains life risk or high fire load areas.

Siting of Detectors

BS 5839 Part I Section 12

5.2.20 Detailed information on the siting and spacing of detectors is given in section 12 of BS 5839 Part I.

BS 5839 Part I para 14

5.2.21 Note should be taken of the high rate of false alarms due to dust which frequently occurs when smoke detectors are placed in voids; more frequent cleaning and maintenance is required and cleaning of voids is desirable.

BS 5839 Part I para 12.6.2

5.2.22 The use of detectors in ventilation ducts (generally probe mounted) to protect the area from which air is being extracted is not generally satisfactory.

BS 5839 Part I para 12.6.3

5.2.23 It is sometimes thought that detectors in a room will not operate in the presence of mechanical ventilation because any products of combustion will be swept away from the detectors. This is generally not so, even with high air change rates, because the velocities produced in the room by the ventilation are small compared with the convection currents produced by even a fairly small fire. Note should, however, by taken on the greater number of detectors which may be required in a room with a high air change rate.

False alarms

BS 5839 Part I para 14

5.2.24 Particular care should be taken in the design of the system and in the siting of detectors to avoid false alarms. Common causes of false alarms are excessive air movement due to mechanical ventilation or open windows, electrical transients, flies, dust or pollen.

6 Control and indicating equipment

6.1 Control equipment

General

BS 5839 Part I para 15

6.1.1 Ideally the equipment selected should comply with the British Standard and have been independently tested for conformity. The following is mainly concerned with equipment which is similar to that of BS 3116: Part 4, but which may not fully comply. Certain aspects of equipment design to which particular attention should be given are described. The designer must ensure that the detectors used are fully compatible with the control equipment. Hybrid systems incorporating components from a variety of manufacturers can be either unstable or ineffective if used in un-tested combinations.

6.1.2 Basically all types of fire alarm control, indicating and power supply equipment, function in a similar manner. Any differences are mainly in the additional facilities available and in the number of zones covered. The procedures to be adopted in the event of an alarm largely determine the types of facility required, while the number of zones fixes the size of the control equipment. Several manufacturers offer highly versatile equipment in which most facilities are either incorporated or can be provided as a standard optional extra. In the former case facilities may be fitted which are not required thus tending to increase the cost. Simpler equipment is satisfactory where few facilities are required. Allowance should be made in the basic design of the equipment for possible future extension or modification. Some manufacturers design equipment specially for each system. When this is done there is a danger of circuits being used which have not been thoroughly tested and which therefore may cause prolonged teething troubles. Thus it will generally be advisable to select equipment which has been proved satisfactory in service rather than equipment for which some circuit development work would be needed.

Zone Modules and Detector Types

6.1.3 Care should be exercised if several different manufacturers are to be involved with one system. Some types of detector are designed for use only with specified control and indicating equipment. When detectors operating on different principles are to be used in the same zone, a zone module suitable for all the detectors is required; the costly alternative is to use separate zone modules for each type of detector and to feed a common zone indicator. This requires some duplication of detector lines.

Fault Warning

BS 5839 Part I para 15.1.3.2

BS 3116 Part 4 para 4.5.2

6.1.4 In addition to the events listed in BS 5839 Part I paragraph 15.1.3.2, the removal of a detector should initiate a fault warning even when ring circuits are used. (This differs from the requirement of BS 3116: Part 4 para 4.5.2). The fault warning should continue until the detector is replaced and be incapable of being reset with the detector missing.

6.1.5 In some systems, removal of a detector can result in the power being disconnected from the lines beyond that detector. Removal of any detector should not impair the correct operation of any other detector or call point. By automatic monitoring of each line of a ring circuit, a fault warning can be given on removal of a detector, which continues until the detector is replaced. Some detectors, especially in four wire non-ring circuits, initiate a fault warning if they cease to receive power. A facility for manually disconnecting detector lines from the equipment may be provided so that the remainder of the system can operate normally if a detector or its lines are faulty. The design of such a facility must ensure that an alarm sounder is not disconnected when a zone is so isolated.

6.1.6 The lowest increase in line resistance at which a fault warning is given should be such that operation of a detector at the end of the lines is still possible and would initiate an alarm.

6.1.7 A facility for indicating an earth fault on detector lines may be required if such a fault could affect the transmission of signals over telephone lines.

Indicators

6.1.8 Either filament lamps or light emitting diodes (LEDs) are used. The mechanical flag type is obsolescent.

BS 5839 Part I para 15.2(g)
BS 3116 Part 4 para 4.7

6.1.9 Filament lamp indicators can have windows large enough to carry labelling, but the lamps fail suddenly whereas LEDs, provided no manufacturing fault exists, lose efficiency slowly and may still be bright enough after 20 years use. Fault indicators may be provided for each zone to indicate line fault conditions and also, in some equipment, faults in the zone circuitry of the equipment. Where such indicators serve only to provide information for repair purposes they need not be visible from outside the equipment; the common fault indicator shows the existence of a fault in the system.

6.1.10 In order to draw attention to newly received signals, equipment may be designed so that indicators intially give an intermittent indication which becomes continuous after operation of a manual control for silencing the sounders.

Control functions

6.1.11 With some types of equipment, alarm sounders can be controlled by zone circuitry so that alarms may be given according to preset pattern, e.g. "evacuate" alarm in the fire zone, "alert" alarm in zones adjacent to the fire zone, and no alarm in other zones. With such equipment the functions of manual controls for the sounders need to be carefully considered: it may be necessary to have separate "silence alarm", "evacuate" and "alert" controls for each zone.

6.1.12 It is normally desirable to control ancillary services, such as door holders, on a zone basis, both automatically and manually.

Testing

6.1.13 Equipment may include a test switch for each zone whereby detector operation can be simulated. Normally this only checks the zone circuitry of the equipment and does not remove the necessity of checking the system by operating manual call points and, where possible, detectors.

6.1.14 Unmonitored ring circuits for detectors or alarm sounders are only permissible if test facilities for such circuits are included in the equipment.

Alarm sounder silencing

BS 5839 Part I para 9.12

6.1.15 Alarm sounders must operate as required, even if a silence control has been operated previously, and even if the equipment limits the number of zones for which an alarm can be simultaneously visually indicated. The sounder which indicates operation of a silence switch may continue to sound on subsequent initiation of an alarm in some equiment. Silencing switches should only be provided at the main fire alarm control panel and under the control of authorised personnel.

6.1.16 To facilitate fire alarm testing, an isolating facility, with suitable indication, may be provided in the panel separately for each zone.

Signal to remote manned centre

6.1.17 Only approved equipment may be connected to telephone lines. An indicator showing when an alarm signal is being fed to the telephone lines serves a very limited purpose unless it is associated with a means of detecting line faults. If, for the purpose of routine testing, the lines are to be disconnected to avoid test alarms being transmitted, then a manual switch is required for this purpose together with an audible and visual warning of such disconnection.

BS 3116 Part 4

6.1.18 Equipment to BS 3116: Part 4, is required to continue transmitting the fire signal to the remote manned centre until the system is reset. However, unless the zone in which the alarm originated can be electrically isolated from the control and indicating equipment, it may be necessary to replace an operated device or repair damaged wiring before the system can be reset. If the Fire Brigade leaves the premises before the system is reset, the fire signal will still be transmitted, thus preventing a further alarm from being recognised at the remote manned centre. It is possible to arrange for such a signal to be cancelled whilst retaining the local alarm indication but such a facility must cause the signal to the remote manned centre to re-start automatically in the event of a further alarm and an indication of cancellation would be necessary.

Alarm indication on Systems with Central Equipment

BS 5839 Part I para 3.5

6.1.19 Where sector and zone indicators are fitted to the same panel there must be clear differentiation between the two types. A sector is defined as a sub-division of the premises larger than a zone and will normally contain several zones.

Fault warning on Systems with Central Equipment

6.1.20 Faults in the lines to central equipment must be specifically indicated locally on sector panels and initiate a fault warning in the central equipment.

Slave panels

6.1.21 Remote slave panels should be used where the unusual or complex layout of the hospital would result in delay in locating the trigger device that has operated.

6.2 Power supply

General Requirements

BS 5839 Part I para 16

6.2.1 Requirements for the duration of standby supplies and battery life are specified in BS 5839 Part I for premises with and without standby generators. In sizing the batteries, provision should be made for planned future extension, eg the addition of automatic detectors etc. The requirements of BS 5839 Part I supersede such requirements in BS 3116: Part 4. The choice between batteries having a service life of at least 20 years (ie the Plante Lead/Acid type and certain Nickel Alkaline types) and those with a life of about 4 years, depends mainly on economic factors. The longer life batteries require accurate charging and regular maintenance. Sealed cells should require no maintenance, but types which normally fail suddenly after a specified time should be replaced at appropriate intervals to minimise such failures whilst in service. Automotive type batteries are not designed for use in standby power supplies and they may be expected to fail suddenly.

6.2.2 *Warning:* Lead Acid and Alkaline batteries should not be housed together in the same room or enclosure.

Performance of batteries and chargers in fire alarm systems.

6.2.3 Performance requirements are given in BS 5839 Part I. To meet these requirements the battery, when charged as specified, must be capable of supplying the system for a given time. Estimating the performance of the charger and battery by simple calculations, based on the nominal capacity of the battery and the maximum rated current output of the charger, can result in serious errors when the battery does not become fully charged during the period specified. For example, in order to prolong battery life and reduce maintenance, the battery voltage may be limited to a value slightly below that at which gassing occurs. A battery may then take several days to reach its peak state of charge depending on the type of charger. Another factor is that, in systems where the battery is float charged, the charger supplies current to the system whilst charging the battery. Unless sufficiently detailed information is available on the performance of chargers and batteries to enable accurate estimations to be made, tests should be carried out to ensure that the requirements are met for each system. In the tests, loads can be simulated when adequate data on them is available. Since the effective capacity of a battery reduces with increasing rates of discharge, and since the highest rate of discharge occurs during the last stage of a test, the battery capacity must be selected with this taken into account.

BS 5839 Part I para 16.3

6.2.4 In large premises, especially where buildings are widely separated, power supply equipment for operating alarm sounders should be located locally so that long cable runs with excessive voltage drops are avoided. In all cases the standby supply should be capable of maintaining the system in full normal operation for at least 24 hours and at the end of that period still have sufficient capacity to provide the evacuation alarm in all zones for a further 30 minutes.

Construction

6.2.5 The circuitry may be split between a number of plug-in modules having specific functions, eg a zone module for controlling und indicating fire alarms and fault warnings associated with one zone. Modular construction enables faults to be corrected simply by replacing a module. When comprehensive fault monitoring is also provided, repair is greatly facilitated. However, excessive fault monitoring is likely to be troubleseome because the additional circuitry required will also develop faults. Also connectors are not as reliable as direct wiring: the contacts of some types of printed circuit board edge connectors showing a marked deterioration after a few removals and insertions.

6.2.6 Although solid state components have a lower failure rate than their mechanical counterparts, the overall failure rate of a prototype solid state circuit may be similar to that of the equivalent relay circuit.

6.2.7 Several methods are used for restricting access to manual controls, eg key operated switches lockable covers, breakable glass covers (for use only in an emergency). The types of control concerned, and how access is to be restricted, depends on the procedures to be adopted if there is an alarm and on the location of the equipment.

Special Control Equipment

Time Division Multiplex

BS 5839 Part I Para 17.6

6.2.8 In recent years time division multiplex (TDM) communication systems have come to be used for fire alarm purposes. These systems require only a pair of wires around the monitored site, thus saving substantially on wiring cost. Each zone, instead of having a pair of wires back to the central control panel, has a time slot in which it signals via the pair of wires to the main control equipment. The system is scanned several times per second. The equipment within each zone is generally conventional.

6.2.9 In principle, TDM in no way infringes either BS 5839 Part I, or BS 3116 Part 4, on Control Equipment. TDM should only be considered where the economics justify its use, bearing in mind the future use of the hospital.

Two wire

6.2.10 Some equipment requires only two wires in each zone; detectors and alarm sounders being connected across the same wires. This may reduce the cost of some systems, but with some types of detectors the detectors and alarm sounders cannot be simultaneously energised in the same zone, thus two stage alarm facilities are not then possible. This system, however, lacks flexibility in signalling at present, and it does not conform to BS 3116 Part 4.

Microprocessor Technology

6.2.11 It is anticipated that microprocessor technology may become more widely used in fire alarm systems together with advanced multiplexing techniques. These may be used so long as the main provisions of this HTM and BS 5839 Part I are met.

6.3 Cables and Wiring

BS 5839 Part I para 17

6.3.1 A wide variety of cables and wiring systems is available which are suitable for fire alarm systems in the right circumstances. Detailed guidance is given in BS 5839 Part I paragraph 17. It is important to note that cables supplying control equipment and alarm sounders are *now* required to be fire resistant as defined in BS 5839 Part I para 17.2. In general MICS or similar cable is to be preferred for sounders.

7 Installation and Commissioning

HTM No 17

7.1 Attention is drawn to Hospital Technical Memorandum No 17 Health Building — Engineering Installations, Commissioning and Assocated Activities.

Commissioning

7.2 The commissioning of the fire alarm system should be programmed in such a way that each stage of the exercise is carried out in a logical manner:

a. inspection of installation

b. insulation and earthing tests of all cables and wires. (Generally this is carried out in the course of cable installation).

c. initial operational testing.

d. full commissioning test.

7.3 Before commissioning, it is recommended that consideration be given to the method employed, number of staff required to carry out the operation, tools, instruments and ancillary equipment needed such as ladders, stagings, keys for all department doors etc, so that the programme can proceed in an efficient way and minimise the amount of man hours spent on site.

7.4 On a large system it is recommended that a testing team of a minimum of three persons be used for this exercise. One to be stationed at the main annunciator panel (controlling the whole operation), one testing the initiating and alarm points etc and one to carry out any other ancillary work.

7.5 To minimise the amount of travelling time between zones and the main control panel area, the testing personnel should be in direct communication with each other. Where an adequate telephone system is not available at the time, consideration should be given to the use of a portable two way radio communication system.

7.6 A record that commissioning tests have been carried out should be made in the log book recommended in para 7.7.

Log Book

BS 5839 Part I Appendix D

7.7 A log book as outlined in BS 5839 Part I should be kept for each complete fire alarm system and should be kept up to date recording specifically for the Fire Alarm System:

a. all alarms (genuine, practice or test).

b. all faults stating details such as time they occurred, type of fault or false alarm and remedial action taken.

c. all service tests and results.

d. maintenance and routine tests and results.

e. commissioning tests. Test data should be filed separately in the service test record file.

Inspection of Installation

BS 5839 Part I para 26.1

7.8 An inspection of the complete installation should be undertaken to ascertain that:

a. the system has been installed in a satisfactory manner.

b. the methods and standards fully conform to the latest edition of "IEE Regulations for Electrical Equipment of Buildings" and the relevant British Standards.

c. the materials and components also comply with the system technical specification.

d. record plans, circuit diagrams (see Appendix 1 — Basics of a typical solid state Fire Alarm System), operating instructions and manufacturers' recommended testing and fault finding procedures have been supplied.

Insulation of Cables and Wiring

BS 5839 Part I para 26.2

7.9 Using a 500v d.c. test instrument, insulation tests to earth and between conductors should be carried out in accordance with the IEE Regulations, with all the apparatus disconnected so as not to damage any items of sensitive electronic circuits or equipment. All tests should be noted in the log book. Wiring that has been subject to a test with a 500 volt Megger should be discharged to earth before being connected into electronic equipment as the electricity stored between the cores and the sheath or between cores will be sufficient to destroy its sensitive micro-circuits.

Earthing Tests

BS 5839 Part I para 26.3

7.10 Earth continuity and earth loop impedance tests (where appropriate) should be made in accordance with IEE Regulations and noted in the log book.

Initial Operation Test

7.11 The system should be demonstrated to prove that it operates in a satisfactory manner and complies with the design intent, and also to familiarise the testing personnel with the operation of the apparatus. Before testing the alarms, ascertain that all staff have been

notified that the system is being tested. Staff should also be advised when testing is completed.

Full Operational and Commissioning Tests

7.12 The entire system should be tested to ensure that it operates satisfactorily and that all:

a. initiating points (trigger devices) are tested separately and function correctly.

b. sounders operate satisfactorily and are within the requirements of Chapter 4.

c. annunciator panels and ancillary equipment operate and function satisfactorily.

Particular attention should be given to checking that:

all alarm sounders operate within the recommended parameters of Appendix 5.

zone indication is correctly labelled.

the mains fail device and its indication operate correctly.

fault and alarm indication operate correctly.

the voltages and loading of the system are correct.

detectors are correctly set.

audible/visual pulsing times are correctly set.

batteries are fully charged.

charging rates are correctly set.

8 Testing and Routine Maintenance

General

8.1 It is essential that Fire Alarm installations be maintained on a planned preventive maintenance basis in accordance with Estmancode Chapter II, Section 2 which sets out the maintenance tasks and specifies their frequency. The entire installation should be examined as specified in BS 5839 Part I paragraphs 29.2.5(c) and (d). Authorities should ensure that this maintenance commences immediately after commissioning has been completed.

8.2 The frequency of maintenance tasks is given in maintenance manuals associated with the system described in Estmancode. Cleaning and maintenance should be in accordance with the manufacturer's instructions. However, practical experience gained from the usage of equipment supplied by different manufacturers and the local environmental conditions might well result in the need to vary the recommended frequency of some tasks. The terms "examine", "test" and "check" are used throughout the Maintenance Manuals and these are defined in PMG/12.

8.3 The maintenance of the installation may be carried out by the Authority's Works Department staff but where this not practicable, an agreement should be made with the manufacturer/installer or a specialist contractor to service and maintain the installation at the specified frequencies. It is the Authority's responsibility to ensure that:

a. personnel employed for maintenance and operational testing are competent and fully trained in the procedures.

b. full routine test procedures as recommended in this document are available from the manufacturer, installer or supplier.

c. maintenance manuals and drawings showing zones, circuit diagrams, and testing equipment are available.

d. arrangements have been made to notify the occupants of the building whenever maintenance requirements cause alarm sounders to operate.

e. a procedure for dealing with a real alarm occurring during tests is established.

f. where the communication with the brigade is direct or automatic, this connection is temporarily discontinued and all parties informed.

g. the installation is reinstated in good working order after routine maintenance or following a breakdown or repair.

h. a log book for recording the results of operational testing, faults and failures of the installation is provided and kept up to date.

Routine Procedures

8.4 It is considered essential that the following procedures should be carried out daily under the management of the Works Department:

a. an inspection of the log book to ensure that any faults or failures recorded the previous day have received or are receiving attention.

b. an inspection of the main and auxillary panels to verify that they show 'normal operation'. Any faults indicated shall be recorded in the log book.

c. a test of any unmonitored direct line connection to a public Fire Brigade or central alarm relay station. The time of day for this test should be agreed with the Fire Brigade or centre concerned.

d. a test of any unmonitored connection between sector and main panels.

Alarm Testing

8.5 Testing should be arranged according to the number and location of zones within the system to ensure that disturbance to and by the system is kept to a minimum.

8.6 The system should be tested under alarm conditions by operating a trigger device in each zone to ensure that the alarm is given correctly for each zone. It is neither necessary, nor normally desirable, to operate all alarm sounders during tests on any one day; however, the arrangements must ensure that all sounders in the system have been tested at the frequencies specified. Arrangements should also be made to ensure that each trigger device (except heat detectors designed to operate once only) is operated at least once during the scheduled period.

8.7 A testing plan for the fire alarm system showing the location of numbered detectors, call points, and sounders should be produced from the fire drawing of each department.

Control Equipment

8.8 Control and indicating equipment, except simple single zone control units, should be tested at the frequency specified to verify satisfactory operation as follows:

a. during the tests specified in 8.6 each zone should be correctly indicated, the control sounder should operate as required, and correct outputs to alarm sounders and signals for transmission to a public Fire Brigade or central alarm relay station should be provided (where special alarm facilities are incorporated, appropriate tests should be carried out in accordance with a schedule devised in consultation with the manufacturer).

b. the operation of each user accessible control switch should be tested under the set of conditions appropriate to its function.

c. the correct indication of fault warnings should be checked by simulating, in turn, at least the faults (a) to (h) of BS 5839 Part I paragraph 15.1.3.2.

Duration of Stand-by Supplies

8.9 Test to ensure that the requirements of BS 5839 Part I 16.3 and 16.4 are met.

Battery Maintenance

8.10 Batteries should be maintained in accordance with the requirements of maintenance manual PMG/12 Section E.6. A test should be conducted at specified intervals to verify that the battery will come into operation in the event of a mains supply failure. Where voltmeters are fitted to the main panel, the main and secondary voltages observed during the tests should be recorded.

8.11 The following voltage test should be carried out unless the method specified by the manufacturer under BS 5839 Part I, 16.4.2.1 is more appropriate to the particular type of battery in use.

8.12 A voltage test under full alarm load conditions should be undertaken at specified frequencies. Preferably, the test should be applied for ten minutes using a dummy load but where it is necessary to operate audible alarms, the test period may be reduced to a minimum duration of thirty seconds. Any test readings which fall outside the limits recommenced by the manufacturer or fail to meet design parameters should be investigated and the malfunction or fault remedied.

8.13 When a battery has been subjected to an accidental or emergency discharge, the system should be immediately examined to ensure correct recharging. Where frequent "topping-up" is found to be necessary the battery should be examined for possible overcharging, high ambient temperatures or other adverse conditions and remedial action taken.

Battery Charging Equipment

8.14 Battery charging panels and exposed relay contacts should be cleaned and tested at the specified frequency. Tests should be carried out to ensure that the voltage at the terminals of the panel and the charging rate are correct. All meter readings should be recorded.

Battery Rooms/Cubicles

8.15 Battery rooms should be well ventilated to mitigate the risks arising from the generation of explosive gases during charging. Cubicles, stands and similar equipment shall be examined at regular intervals for signs of wear and corrosion and be repainted with anti-corrosive paint as necessary.

Fire Detectors, Manual Call Points and other Trigger Devices.

Smoke Detectors

8.16 The complete automatic fire detection system, from sensor to sounder, should be regularly tested. It is not sufficient to check the electrical circuits only, as they can function correctly but the smoke detector may be too insensitive, because of accumulated dirt or more fundamental faults, to react to smoke. To test the complete system the smoke detectors should be checked in situ with test "smoke" to verify that the detector operates within the design parameters. This "smoke" must not be corrosive or contaminate the detectors, it must be of known particle size, mass and concentration and pass across the detector head at a known velocity. Also of prime importance is test repeatability. The "Harwell Smoke Detector Tester" has been designed to meet all the criteria. No other tester currently available meets all the requirements and some of the cheaper testers can severely contaminate the head during testing and therefore are not recommended.

Heat Detectors

8.17 Each heat detector, except those designed to operate once only, should be tested in situ as recommended by the manufacturer or by subjecting each detector to a slightly higher temperature than its operational temperature. This may be achieved by means of a small blower heater (hair dryer) or a heater made up of a 150 watt lamp fitted in a container that will cover the detector. The Works Officer responsible for maintaining the system should determine the method to be employed.

8.18 As the fusible type detector cannot be tested it is recommended that this type should only be used where no other detector is suitable.

Beam Detectors

8.19 Each beam should be tested for correct operation in the event of fire by adopting a suitable procedure devised in consulation with the manufacturer.

Manual Call Points

8.20 Each manual call point should be tested by operating any built-in test facility (provided that this directly simulates operation of the device, eg the facility must operate the contacts which are normally used), or by releasing the device's door or frangible cover.

Cleaning of Smoke Detectors

8.21 The manufacturer's instructions should be followed when cleaning all detectors. In the case of smoke detectors cleaning should be carried out when routine tests indicate that the sensitivity has been significantly affected. Sensitivity may be increased *or* decreased by dirt. Generally in health buildings, detectors should not require cleaning more than once a year in most areas and given further experience, it is probable that a lower frequency could be recommended.

Cleaning Photo-electric Light Scatter Detectors

8.22 Cleaning should be carried out noting the following points:

a. where possible use only a soft brush to clean the detection chamber. If solvents are required consult the manufacturer.

b. all the surfaces inside the detector are coated with matt black paint. If these are scratched they will require re-painting with a recommended paint.

c. in some smoke detectors the focussing of the lamp is critical.

d. if there is a sensitivity adjustment, only adjust it as a last resort, and then check that detector periodically once it has been returned into service.

e. all filters should be cleaned or replaced.

Cleaning Ionisation Detectors

8.23 Cleaning with a blower may be adequate unless inspection and routine testing show that a detector has become insensitive (or too sensitive) when it will be necessary to clean it more thoroughly.

8.24 If cleaning with a blower is not sufficient any additional cleaning should be carried out in accordance with the manufacturer's instructions. This may involve cleaning with a swab as outlined below or with an ultrasonic cleaning bath, for detectors with low activity sources (20 microcuries Americium or 1 microcurie Radium). In either case the cleaning procedure and the disposal of potentially radioactive waste should be under the control of the local NHS Radiological Safety Officer.

8.25 Cleaning requires very few tools. A light brush, or a swab and solvent, may be required for sticky deposits; bench hand tools or a special dismantling jig tool may be needed. However, it is very important that it is carried out on a well lit, clean and tidy bench, preferably covered with formica or similar surface.

8.26 As most Ionization Smoke Detectors use a field effect transistor in the detection amplifier, care should be taken not to induce static electricity discharges through it. This may be avoided by electrically shorting out the two conducting plates of the smoke detector chamber. In some detectors this is done automatically.

8.27 First dismantle the detector and short out the electric plates, taking care to identify and locate the radio-active source. Some detectors may have two sources, but both need the same precautions. Next, clean all parts of the detection chamber plates which are not in contact with the source(s). Then, using a lint free swab clean the radio-active source.

8.28 When cleaning has been completed, remove the plate shorting link and re-assemble the smoke detector. Before the smoke detector is returned to store or use, its sensitivity should be checked again. If the sensitivity is still incorrect the cleaning process should be carried out again. The sensitivity adjustments, if any, should not be touched, unless the manufacturer recommends it.

Spares

BS 5839 Part 1 para 29.5

8.29 In addition to the glass covers and fuses suggested in the British Standard it will generally be desirable to carry spare smoke detectors when these are

in use. When these detectors are ionisation detectors the problem may arise of the storage of radio-active substances. The storage of radioactive substances is covered by the Radioactive Substances Act 1960 (administered by the Radio-chemical Inspectorate) and by the Health and Safety at Work Act. Spare detectors should be stored in an appropriate store monitored by the Radiological Safety Officer. The issue and return of detectors of this store should be recorded. Spare detectors should only be issued to or handled by authorised persons.

Disposal of Ionisation Detectors

8.30 Ionisation detectors should be disposed of under the instructions of the manufacturer or to the Radiological Safety Officer or returned to the manufacturer for disposal.

Appendix 1 Fire alarm circuits

Principles of Design of Detector and Manual Call Point Circuits

A1.1 While there are but two basic control circuits, ie "open circuit" and "closed circuit", a simple definition of each can be misleading because in practice numerous variations and combinations of each circuit are employed.

The type of circuit to be used should be determined by careful consideration of the functions required from the fire alarm system in the particular health buildings concerned, taking into account, simplicity, reliability, liability to damage, operational supervision, cost, environment and other relevant factors. It is unwise to assume that, in general, one type of circuit is better than another.

Four simplified but typical circuits are given below. Alarm and fault sensing units may be relays, solid-state circuits or similar devices; detectors may have mechanical contacts, solid-state circuits, variable-resistance devices, etc. It should be appreciated that many other circuit arrangements are possible and the following circuits should in no way be considered other than for the purpose of illustration.

A1.2 Circuit 1.

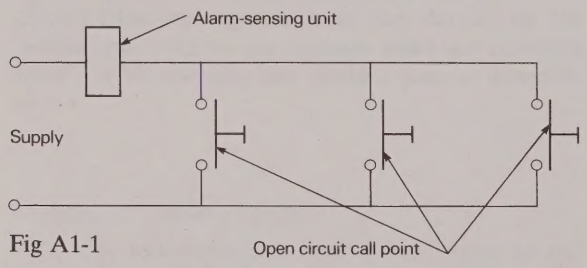

Fig A1-1

Current flows when detector or call point contacts are closed, causing the alarm-sensing unit to operate and initiate an alarm signal.

A broken connection/conductor will prevent a detector or call point beyond the break from operating the alarm-sensing unit.

A short-circuit between conductors will cause the alarm-sensing unit to operate, producing an alarm signal.

In this circuit the alarm-sensing unit could be the alarm sounder.

A1.3 Circuit 2. "Closed Circuit"

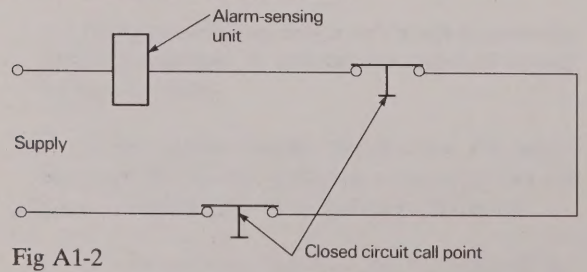

Fig A1-2

Current is normally flowing through the conductors and each detector and call point; the alarm-sensing unit is held operated.

When the contacts of a detector or call point are opened, the current is interrupted allowing the alarm-sensing unit to release and initiate an alarm signal.

A broken connection/conductor interrupts the current to the alarm-sensing unit, initiating an alarm signal.

A short-circuit between conductors will allow the current to by-pass detectors and call points, beyond the short-circuits; thus a detector or a call point beyond the short-circuit cannot interrupt the current and cannot therefore initiate an alarm signal.

A1.4 Circuit 3, combination of open and closed circuits Type A.

Fig A1-3

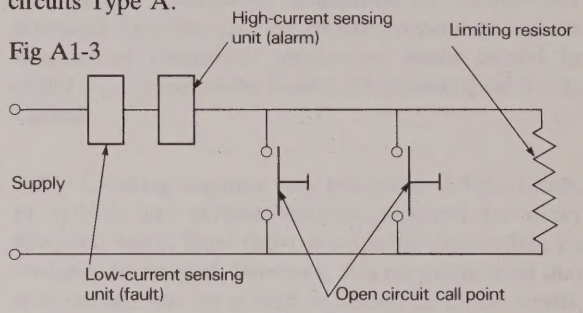

The conductors are "closed circuit" connected; a resistor limits the current through two sensing units to a value sufficient to hold operated the low-current (fault) sensing unit, but insufficient to operate the high-current (alarm) sensing unit.

Open circuit detectors and call points are connected across the conductors.

Operation of a detector or a call point allows the current to by-pass the resistor, the resultant increase in current operating the high-current (alarm) sensing unit which initiates an alarm signal.

A broken connection/conductor will interrupt the current, releasing the low-current (fault) sensing unit, which initiates a fault signal.

A short-circuit between conductors by-passes the resistor, the resultant increase in current operates the high-current (alarm) sensing unit, which initiates an alarm signal.

A1.5 Circuit 4, Combination of open and closed circuit Type B.

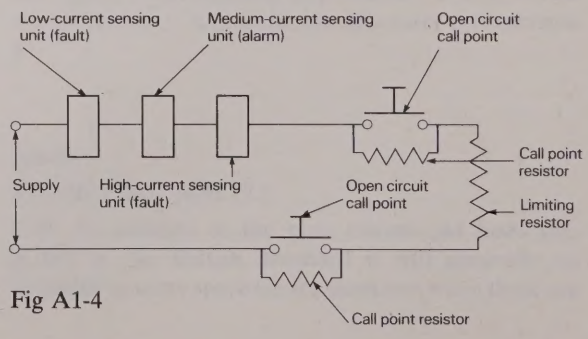

Fig A1-4

The conductors are "closed circuit" connected, the open circuit call points being wired in series, their contacts being bridged by resistors. The values of these resistors and of the limiting resistor are carefully chosen to ensure that the correct current flows in the circuit during the various conditions of fault and alarm.

Under normal conditions the current flowing in the circuit is sufficient to hold the low-current (fault) sensing unit operated, but is insufficient to operate either the medium or the high-current alarm of fault-sensing units. Operation of a detector or a call point by-passes it bridging resistor. The resultant increase in current is sufficient to operate the medium-current alarm-sensing unit, which initiates an alarm signal, but is insufficient to operate the high-current fault-sensing unit.

A broken connection/conductor will interrupt the current, releasing the low-current fault-sensing unit which initiates a fault-signal.

A short-circuit between conductors by-passes the limiting resistor. The resultant increase in crurrent is sufficient to operate both the medium-current alarm and the high-current fault-sensing units. The former's attempt to initiate an alarm signal is over ridden by the latter and a fault signal is initiated.

A1.6 Study of the above circuit will indicate that each circuit has advantages and disadvantages some of which are:

Circuit 1. Advantages

1. This is a simple circuit.

2. No current is consumed on stand-by, therefore a battery and charger of moderate size and cost may be used.

Circuit 1. Disadvantages

1. There will be no indication of a break in the circuit which may make some parts of the system inoperative.

2. A short-circuit between conductors will produce a false alarm.

3. The detectors and call points are not monitored.

This system is not recommended.

Circuit 2. Advantages

1. This is a simple and reliable circuit.

2. The detectors and call points are monitored.

3. The contacts and connections are monitored.

Circuit 2. Disadvantages

1. Current is consumed on stand-by, therefore the size and cost of the battery and charger will be increased.

2. There will be no indication of a short-circuit between conductors, which may make some parts of the system inoperative.

3. A broken connection or conductor will cause false alarm.

Circuit 3. Type A. Advantage

1. The conductors are monitored.

2. An open circuit of a connection or a conductor will produce a fault signal not a false alarm.

Circuit 3. Type A. Disadvantages

1. Current is consumed on stand-by.

2. A short-circuit between conductors will cause a false alarm.

3. The detector and call point contacts are not monitored.

Circuit 4. Type B. Advantages

1. The conductors are monitored.

2. An open circuit of a connection or a conductor will produce a fault signal not a false alarm.

3. A short-circuit between conductors will produce a fault signal, not a false alarm.

Circuit 4. Type B. Disadvantages

1. Current is consumed on stand-by.

2. The selection of values of bridging resistors and limiting resistors is critical. A number of detectors and call points operated together may result in a fault signal instead of an alarm signal.

3. The introduction of additional and complex sensing equipment.

Basics of a typical solid state Fire Alarm System

A1.7 A circuit diagram of a typical commercial fire alarm system is shown in Figure A1–5

Such diagrams are usually standard designs produced by the manufacturers of panels which may vary slightly to suit the particular functional requirements of customers.

It is essential that the diagram is obtained and

understood by the engineer responsible for the contract before placing the order.

Reference to the diagram shows that is is difficult to understand without explanation. In this case a verbal description is given below and also a series of flow diagrams Figures A1–6, 7, and 8 have been produced. These in conjunction with the written explanation enable the operation of a circuit to be followed and serve two useful purposes:-

(i) They can be used effectively in tracing faults.

(ii) They will reveal any functional flaw in the design.

Key to Reading Flow Diagrams

A1.8 It is important to appreciate that a flow diagram is not to be mistaken for an electrical circuit diagram. It is simply a diagram which shows precisely the sequence of events that occur as a result of a single initiating action. If a symbol is shaded, the component is 'ON' (ie energised relay, closed contact, conducting device or illuminated lamp). If a symbol is unshaded, it is off.

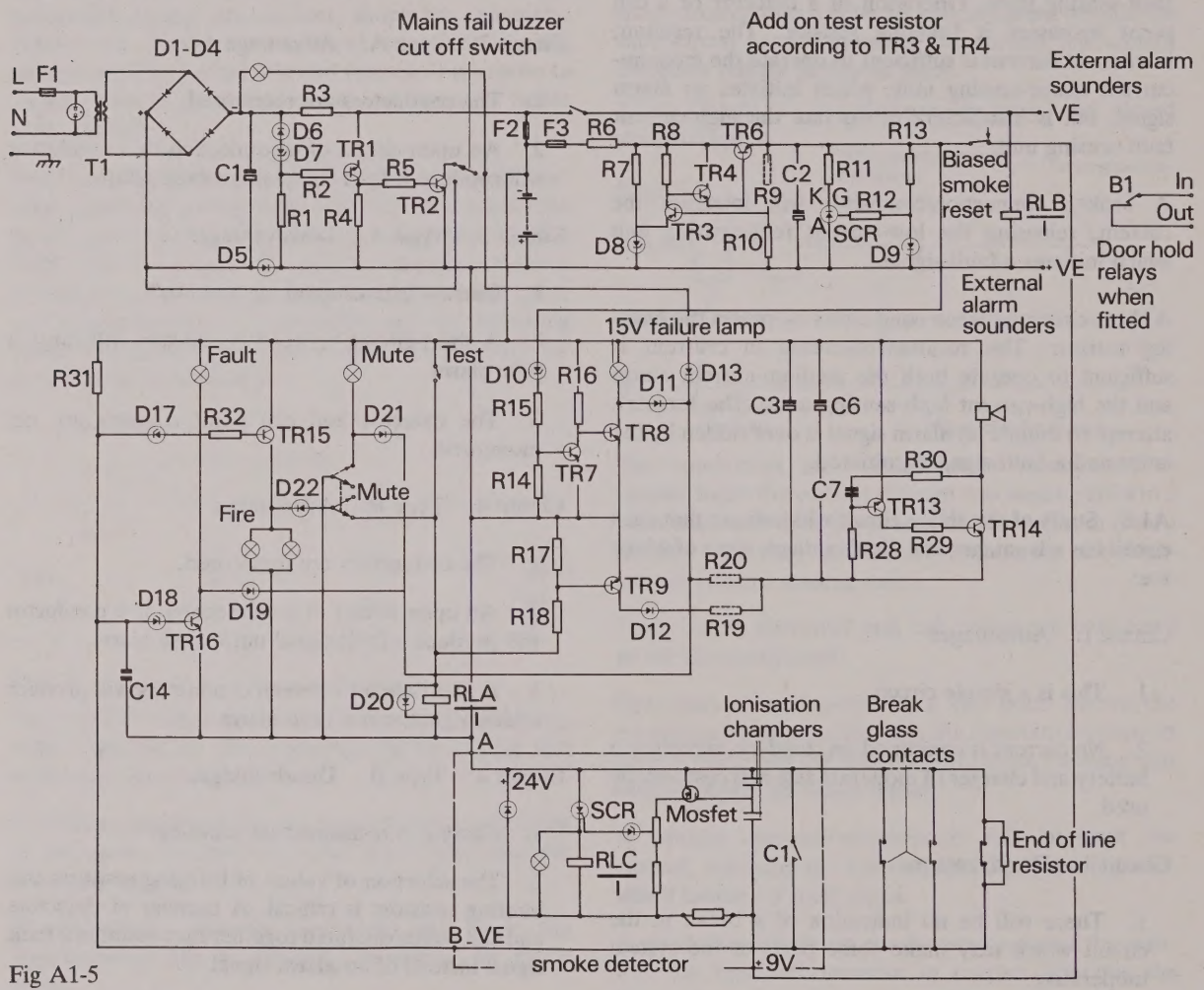

Fig A1-5

Operation of System

A1.9 Fig A1-6 thus depicts the sequence of events resulting from initiating a fire alarm; which could be described verbally as follows:-

a. In the no fire condition TR15 is non-conducting held off by zener diode D17.

b. In the event of a fire a short circuit is caused between A and B either by the operation of a break glass call point or by operation of an automatic detector.

c. This causes the potential at D17 to rise to 24V breaking down the zener diode and thus causing transistor TR15 to conduct.

d. This in turn causes:

i. the fire alarm indication lights for the zone in question to light;

ii. TR9 to conduct as a result of current flowing via D22. TR9 conducting, in turn, causes TR13 and TR14 to oscillate producing an internal audible alarm;

iii. relay RLA to energise, causing contact A1 to close providing 24V output to external audible alarms. The closing of A1 energises Relay RL3 opening contact B1 de-energising the door close relay and thus closing fire doors.

Appendix 1 continued

The other flow diagrams show event sequences for different initiating actions.

Reference to diagram A1-8 shows that by operating the mute switch in the alarm raised condition the magnetic door holders become re-energised. Flow diagrams reveal effects not always readily apparent on the circuit diagram.

Hospital maintenance staff are not expected to trace and rectify all faults on complicated electronic systems. It is however expected that they will ensure that the maintenance instructions contain adequate descriptions and flow diagrams of this type. This will enable hospital staff to trace faults quickly and accurately to a defective electronic card which they can replace, thus enabling them to restore the system without the need to call in the manufacturer.

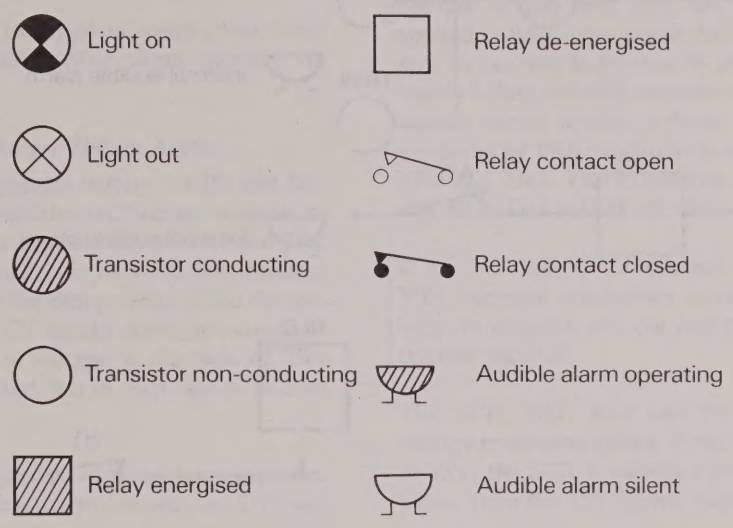

Key to the symbols used in the following diagrams

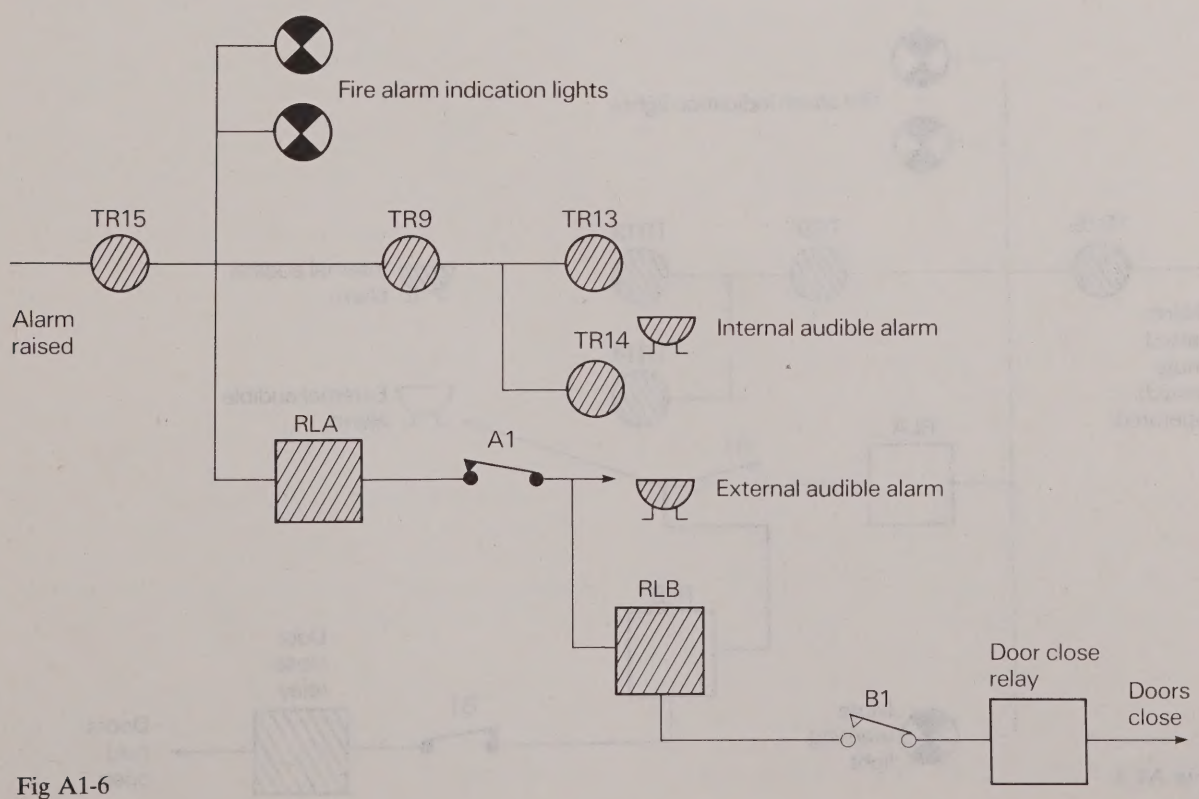

Fig A1-6

e. Fig A1–7 shows the effect of reset.

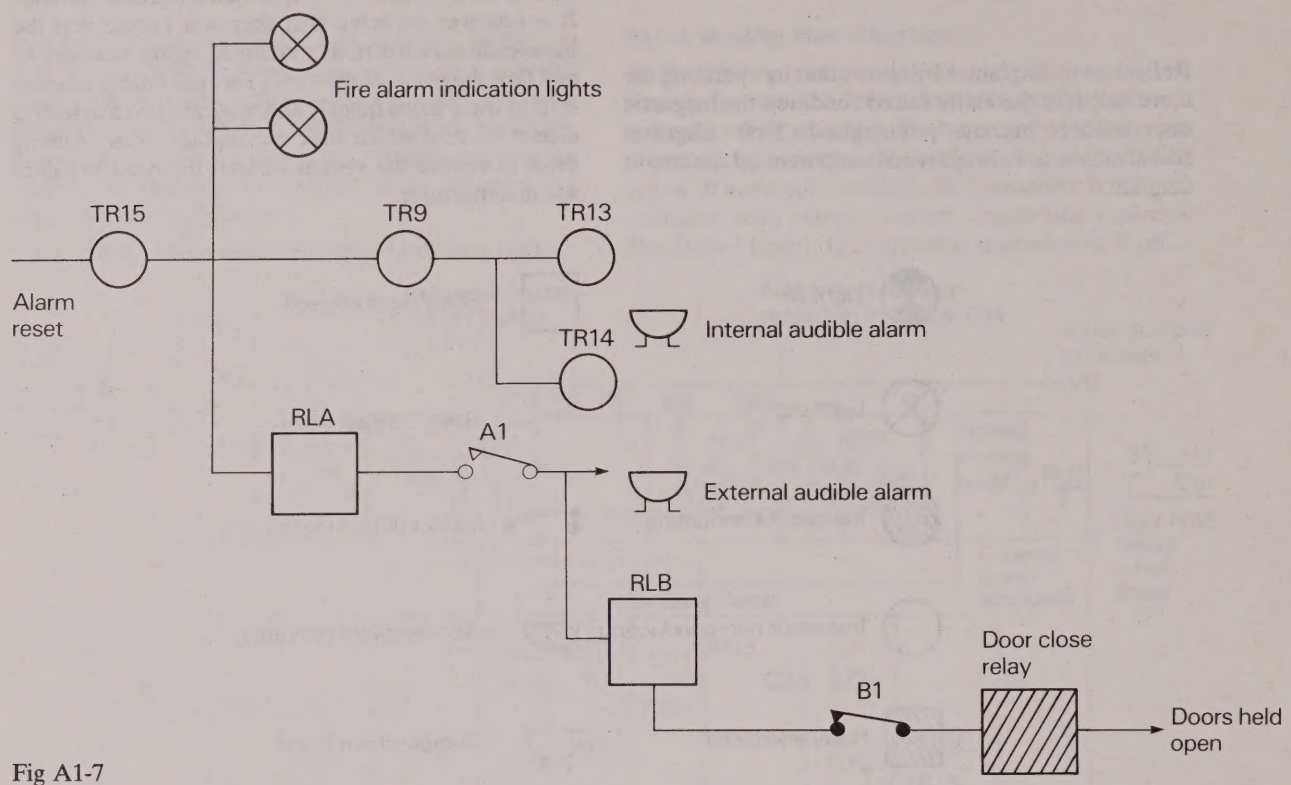

Fig A1-7

f. *Operation of the Mute Switch*

De-energise RLA which opens RL1/1 thus silencing external audible alarms. The effect of operating the mute switch is illustrated in figure A1–8.

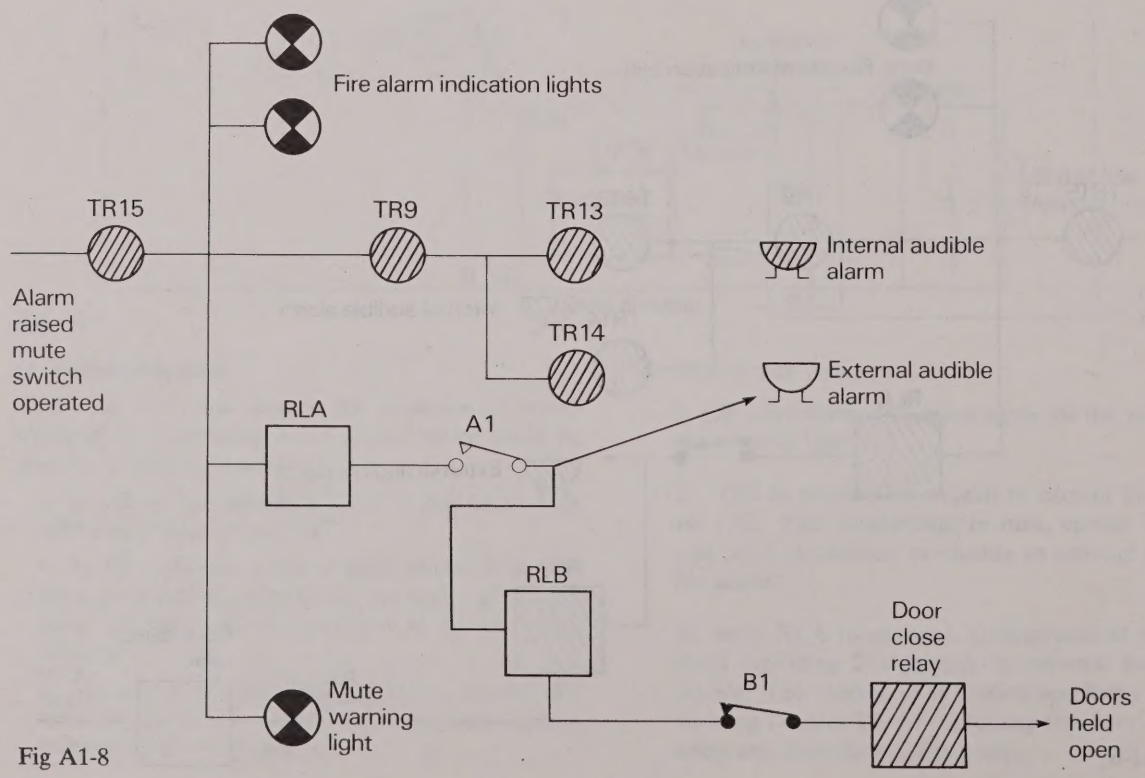

Fig A1-8

Appendix 1 continued

Operation of Test Switch

g. RLA energises, TR9 conducts giving full alarm conditions.

Open Circuit Fault

h. TR16 will only conduct when the potential at D18 = 0. This occurs if the end of line resistor becomes open circuit or if there is a break in the wiring to the Break Glass Contacts, Smoke detectors etc.

On open circuit TR 16 conducts, open circuit fault lamp indicates internal audible alarm operates via D19.

Operation of Battery Charger Failure Alarm

i. The charger charges the battery via R3 and D5. The Neon indicator indicates AC Supply available at the Charger. Under healthy conditions TR1 and TR2 are held off by D6 and D7, ie they will only conduct when the output from the charger fails. If the charger fails the zener diode D7 breaks down and conducts via D6. The change in voltage in the base of TR1 causes it to conduct and this in turn causes TR2 to conduct.

When TR2 conducts, the charger fail lamp indicates and the internal audible alarm operates via D13 and the "Mains Fail Buzzer" cut off switch. Operation of the switch isolates the charger fail lamp and mutes the internal audible alarm. This is for use when the supply failure is lengthy. When the supply is restored, the audible and visual alarms will operate again until the switch is restored to its original position.

Protection for Smoke Detectors

j. The particular detectors used on this system operate at 15V and they can be damaged if the applied voltage rises above 18V. Hence it is necessary to provide indication in the event of the 15V supply failing and also to protect the smoke detectors against excess applied voltage. The 15V supply is produced by TR6 which acts as a variable resistor via TR4 and TR3. TR7 is held on by the 15V via D10 and R15; TR8 is held off while VT7 is conducting.

If the 15V fails, VT7 becomes non-conducting and VT8 becomes conducting causing the 15V failure lamp to indicate and the internal audible alarm to operate via D11.

The SCR, R12, R13 and D9 comprise the over voltage protection device. If the 15V supply increases to 18V, the SCR is switched on causing fuse FS2 to blow. Then the 15V failure alarm operates.

APPENDIX 2.

TECHNICAL DETAILS OF COMPONENTS

Smoke Detectors

Ionisation Type

A2.1 The principle on which this type of detector operates is that the air between the electrodes is ionised by a radio-active source and a current flows.
Smoke entering the space between the electrodes causes ions to recombine thus reducing the current flowing. It is this reduction in current which is used to operate the fire alarm circuit.

Reproduced from the Home Office Manual of Firemanship HMSO.

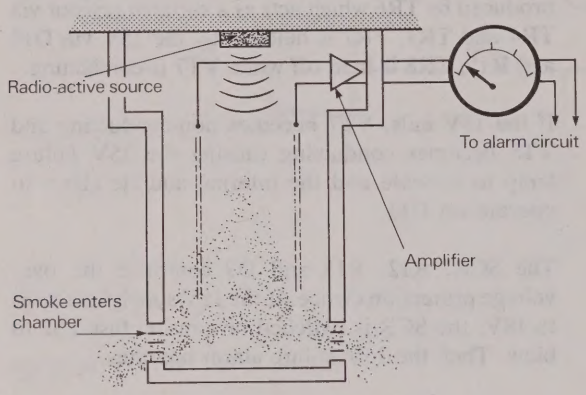

Fig A2-1 *The principle of an ionisation smoke detector*

The detector usually has two ionisation chambers, the outer which is open to atmosphere and a closed inner reference chamber. There are a number of commercial units which have dispensed with the reference chamber. The radio-active source is usually Americium 241 or Radium 226. The running current is typically 25 μA with operating current of approximately 30 −500mA.

The detection and the reference chambers are arranged in the form of a bridge and the smoke effectively increases the resistance of one arm of the bridge formed by the detection chamber. This un-balances the bridge. The resulting offset is then amplified electronically. The construction and circuitry of a typical ionisation detector is shown in Fig A2-2.

The inner chamber is connected in series with the outer chamber both electrically and mechanically and is sealed to the atmosphere. A voltage of 15V DC is applied across both chambers and a small current flows continuously. The junction of the two chambers has a normal potential of 6 volts with the chambers in balance and is connected to the gate of a MOSFET device. This device has a very low input leakage current in the order of 10pA and has extremely high gain characteristics. This high gain is needed because of the very small signal produced by the ionisation chamber.

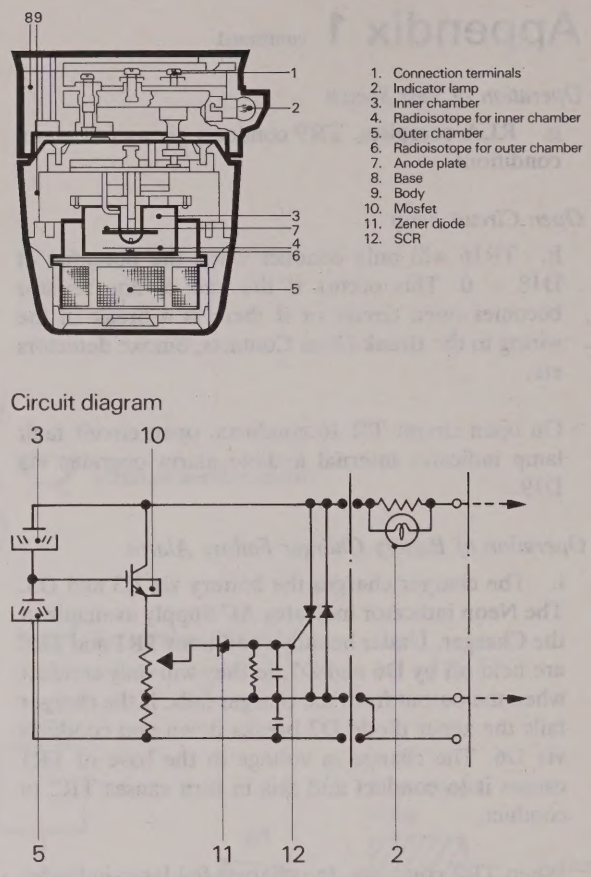

Fig A2-2

The MOSFET output is fed through a 5 kilohm potentiometer sensitivity control. As combustion products enter the outer chamber its effective resistance increases and the junction voltage also increases causing a corresponding current change to take place in the MOSFET. This current drain from source to drain in the MOSFET develops a voltage across the sensitivity potentiometer. A part of this voltage is tapped off and fed to a zener diode. When this voltage rises to 9 volts the zener diode conducts, applying a gate voltage to the silicon controlled rectifier, switching it on and passing current through the indicator lamp and the control panel zone alarm unit. The RC network between the zener diode and the SCR is primarily for noise rejection purposes.

With the detector described above only two wires are required. Some models require a separate 24 volt DC supply to power the unit. The change in current across the ionisation chambers is changed into a change in voltage by circuitry within the detector which in turn is used to operate a built in relay which in turn operates the fire alarm circuit which is connected in an open or closed circuit by a further pair of wires.

As the detectors have a radio-active source of less than 100μ curies there is no legislation (at present) for registering the use of detectors with the Department of the Environment.

Light Scatter Type

A2.2 The detector smoke chamber is black and therefore reflects no light. A concentrated parallel beam of light is projected across the chamber. In a housing at right angles to the beam is fitted a photoelectric cell.

Normally no light reaches this cell. As smoke enters the chamber the light is reflected off the particles onto the photoelectric cell. The amplified electrical charge of the cell activates a relay, triggering the alarm. This is the mode of operation of a 4 wire light scattering detector. Two wire light scatter detectors are also manufactured.

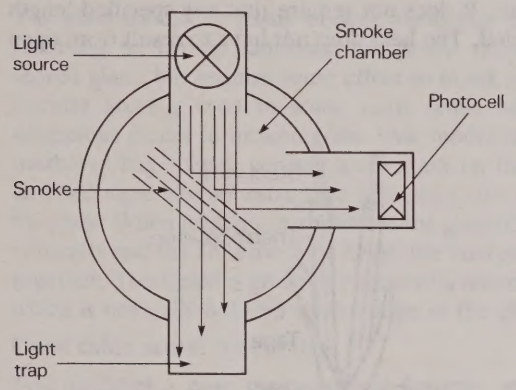

Fig A2-3 *Principle of an optical light scatter smoke detector*

Optical Beam Type

A2.3 Light is emitted from a source located at one end of the area to be protected. A photocell receiver located at the opposite end produces an electrical signal which reduces as the light becomes obscured by smoke. At a pre-set obscuration an alarm is initiated.

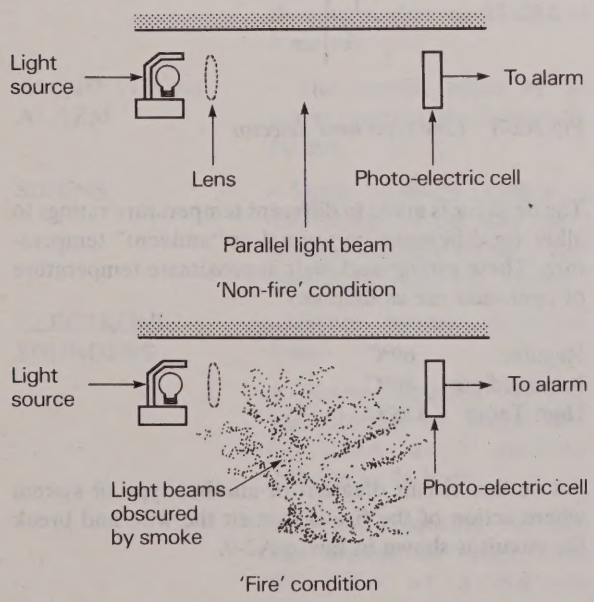

Fig A2-4 *Optical Beam Detector* reproduced from the Home Office Manual of Firemanship HMSO

Heat detectors

A2.4 BS 5445 Part 5 does not recognise the distinction between rate of rise and fixed temperature heat detectors but rather defines three grades of detector with different responses to rate of temperature rise, grade one being the fastest and grade three the slowest. All detectors to BS 5445 Part 5 must also have a fixed temperature element.

However, manufacturers do offer what are described as fixed temperature and rate of rise detectors respectively and in general manufacturers do not describe their detectors in terms of the grades of BS 5445 Part 5.

Fixed Temperature Point Heat Detectors

A2.5 These usually come in two types working on:-

a. Thermostatic principle, ie the deflection of a bimetal strip with an increase in temperature opening or of closing electrical contacts on the fire alarm circuit.

b. Fusible Element – where a eutectic alloy fuse melts at a given temperature allowing contacts to make or break a fire alarm circuit (figure A2-5).

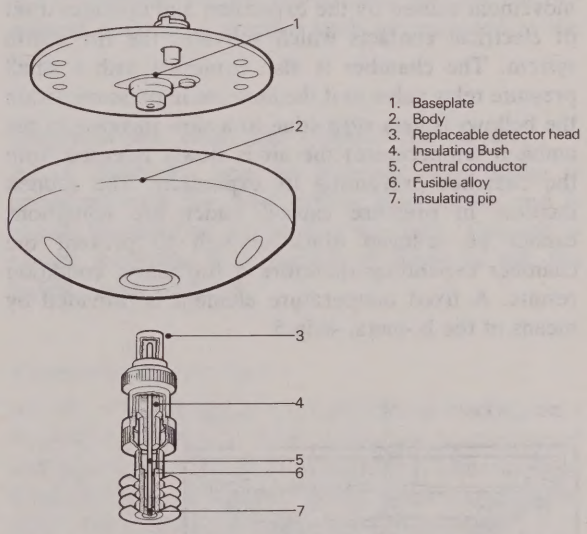

Fig A2-5 *Fusible Element Type Heat Detector*

Rate of Rise Heat Detectors

A2.6 The most commonly used are:

Bimetallic Type (Figure A2-6) which depend upon the movement of two bimetallic elements with the variation in temperature. One of the elements is exposed in the main outer case of the detector, the second is insulated within the plastic body of the detector.

A sudden increase in temperature, as with a fire condition, moves the exposed element quicker than the insulated element with the result that contacts fitted to

the two elements come together to operate the fire alarm circuit. A very slow increase in temperature reaching 135°C will operate the detector regardless of the rate of rise.

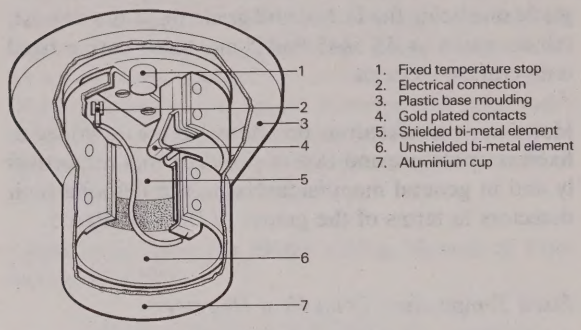

Fig A2–6 *Bimentallic Type Heat Detector*

Pneumatic Type

A2.7 (Fig A2-7) usually have a chamber containing air which expands with a sudden increase in an ambient temperature. One side of membrane which takes the movement caused by the expansion and operates a set of electrical contacts which activates the fire alarm system. The chamber is also equipped with a small pressure relay valve so if the increase in pressure within the bellows is very slow (due to a slow increase in the ambient temperature) the air is slowly released from the chamber preventing its expansion. The sudden increase in pressure caused under fire conditions cannot be reduced quick enough to prevent the chamber expanding therefore a fire alarm condition results. A fixed temperature element is provided by means of the bi-metal strip 5.

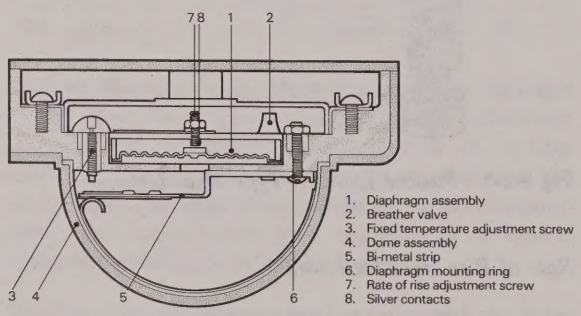

Fig A2–7 *Pneumatic Type Heat Detector*

Electronic devices such as the Thermistor are being used by one in two manufacturers and no doubt could become more economical in the future. Thermistors when applied with associated circuitry provide the same operational characteristics as the two types of heat detectors previously discussed.

Line-type Heat Detector (Fixed Temperature)

A2.8 This line-type fire detector comprises two actuators of high tensile spring steel wire individually encased in a thermoplastic or heat-sensitive material. The encased actuators are twisted together to impose a spring pressure on the thermoplastic material between them, then spirally wrapped with a protective tape and provided with an outer covering to suit the environment of use.

At the critical or operating temperature the plastic yields to the pressure upon it, permitting the actuators to move into contact with each other. This action takes place at the first heated point anywhere along the detector. It does not require that any specified length be heated. The heat does not have to result from open flame.

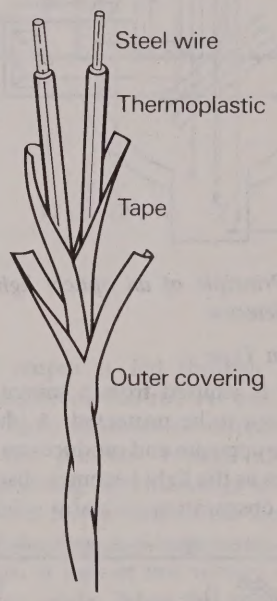

Fig A2-8 *Line type heat detector*

The detector is made in different temperature ratings to allow for differences in normal or "ambient" temperature. These ratings and their approximate temperature of operation are as follows:-

Regular	69°C
Intermediate	88°C
High Temp	138°C

An outline circuit diagram of another type of system where action of the fire is to melt the wire and break the circuit is shown in figure A2-9.

Manual call points

A2.9 Call points for hospital use will generally be of the frangible cover type.

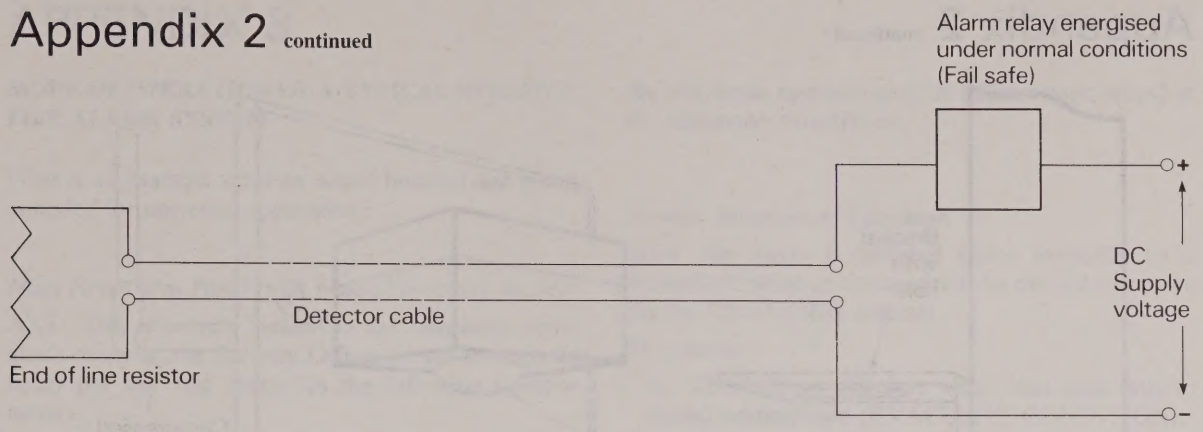

Fig A2-9 *Line type heat detector*

The glass should be easily broken preferably without resorting to fitting hammers etc. Some units have scored glass, but require some effort to break and the circular scoring used in some units tends to leave dangerous pieces of broken glass. One model recently marketed has a small vertical score mark on the glass and Sellotape-like adhesive tape adhered to the rear of the glass. When pressure is applied to the glass it breaks vertically and the adhesive tape keeps the broken edges together. The signal is given by means of a microswitch which is normally held off by the edge of the glass.

Good cable access is desirable.

Test facilities - easy operated test features assist in keeping routine test times down to a minimum.

Sounders

Details of Some Typical Sounders Available on the Market

A2.10

6" BELL	- A 6" bell will normally produce approximately 83 dBA at 3 metres
AUDIO VISUAL ALARM	- The current taken by an audio visual alarm is typically 60 mA
SIRENS	- Sirens normally produce in the region 87-100 dBA at 3 metres, typically taking a current of 1.5 AMPS at 24 volts.
ELECTRONIC SOUNDERS	- Typical figures are as follows:-

a. Sound frequency 700-1000 Hz. Radius of range 70m 60 dBA at 3 metres 100 mA at 24 Volts

b. Sound frequency 800-1000 Hz. Radius of range 192m 97 dBA at 3 metres 300 mA at 12 Volts

c. 98 dBA at 1 metre 25 mA at 24 Volts

Door Retainer Units

Two part door holders

A2.11 These consist of a wall or floor mounting electro-magnet and a door mounting plate. This type is useful where the door opens against a wall otherwise it may be necessary to construct brackets to fix either of the two parts.

Door Release Locks

A2.12 Similar to the above unit but the electro-magnet operates a positive latch incorporated in the unit.

Combined door closer and Magnetic door holder

A2.13 With this unit the magnetic door holder is combined with the door closing mechanisms and is usually mounted at the head of the door. This unit is usually available in a number of forms to suit the various types of doors.

Pneumatic Door Holder

A2.14 A recent addition to the market working on a completely different principle is the use of compressed air (approx 25 psi) in place of electricity. The wall/floor mounted section consists of a metal block housing a ball catch, the catch being held in the locked position by a plastic membrane supported by compressed air. When the air is released the ball is no longer pushed down by the membrane and therefore retracts into the metal block. The door mounting section consists of an angle bracket with a hole the size of the ball catch.

When the doors are locked into the open position the ball catch passes through the hole in the door bracket retaining the door. On releasing the air the force exercised by the door closer mechanism pushes the ball catch down into the metal block allowing the door to close.

The compressed air is normally provided from a small compressor with the fire alarm de-energising the compressor and releasing the air to the door retainers. The compressed air is provided via small bore plastic tubing.

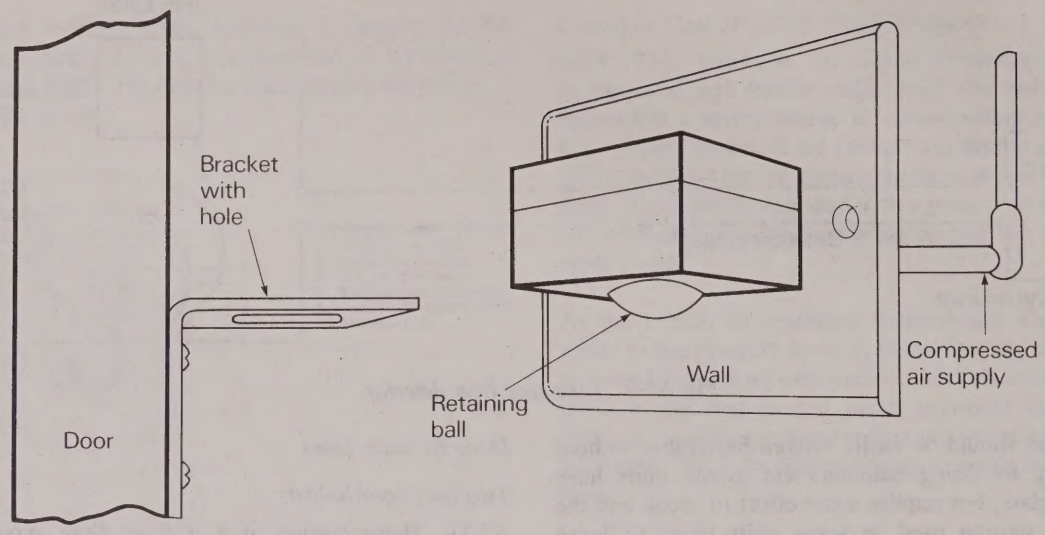

Fig A2-10

Application of door holders

A2.15 The use of door retaining devices should be restricted to fire resisting doors which due to their location cannot be kept in a normally closed position this being the subject of consultation with management of the department concerned.

Installation of door holders

A2.16 The units may be all connected to a single circuit or may be sub-divided into a number of circuits and be switched separately depending on the areas affected by fire.

In the selection of any door retaining device the designer should ensure that the retainer has sufficient magnetic force to hold the weight of the door plus the pull of the door closing unit.

British Standard

A2.17 A British Standard will be issued on door holders in the near future.

APPENDIX 3

MODE OF OPERATION OF A TYPICAL HOSPITAL FIRE ALARM SYSTEM

(This is an example from an actual hospital and is not intended for universal application)

Main Fire Alarm Panel (with manual re-setting facility)

A3.1 This is usually located in the telephone operator's room or the Security Officer's base manned 24 hours per day and comprises the following Components:-

One audible alarm and mute switch (for that alarm only). One silence switch for external alarms complete with warning lights.

For each zone:-

a. Two alarm indication lights in parallel.
b. A reset button.
c. Fault monitoring indicating lights.
d. 3 position switch (centre-off, down-alert, up-evacuate) for manual operation of sounders.

NOTE b and c above can be common to all zones, provided that the affected zone can be identified easily.

Repeat Fire Alarm Panels

A3.2 Repeat fire alarm panels are usually required if the Main Panel is not located at a central point. These show a repeat of the zone visual alarms only.

Wall Chart

A3.3 A wall chart or mimic diagram should be provided adjacent to main and repeat Fire Alarm Panels containing the following information:-

.....HOSPITAL			
ZONE NO.	BUILDING	FLOOR	NEAREST HOSPITAL ENTRANCE
1	A BLOCK	GROUND	MAIN ENTRANCE

At the Main Fire Alarm Panel the chart must be situated so that the information can be easily read by the telephone operator/security officer when seated at the telephone switchboard.

Normal Sequence of Operation

A3.4 An alarm is initiated either manually by a manual call point or automatically by the operation of a HEAT OR SMOKE detector.

The causes:-

a. The bells or sounders within that zone only to sound continuously (EVACUATE CONDITION).

b. All other bells or sounders elsewhere in the hospital (including those essential to key staff) to pulsate, (ALERT CONDITION).

c. An audible and visual alarm to operate on the main alarm panel, indicating the zone number in which the alarm was initiated.

d. A similar alarm may be repeated at other fire alarm indication panels located at strategic points in the hospital if necessary.

Action by the Telephone Operator/Security Officer

A3.5 He or she dials 999 and calls out the Fire Brigade, stating:-

The Hospital Zone, Building, Floor and Entrance to be used, if applicable.

This information is read from the wall chart.

A3.6 *Action by Key Personnel*

a. They find out the location of the fire from one of the panels and proceed to the fire.

b. The Nominated Officer (Fire) of the Hospital assesses the severity of the fire, initiates fire fighting and instructs the Telephone Operator by telephone to sound other alarm bells or sounders, as necessary, to alert or evacuate other zones.

The responsibility for all fire fighting directions including the sounding of alarms will be taken over from the Nominated Officer (Fire) by the Fire Brigade on their arrival.

Re-setting

A3.7 The visual alarms are arranged so that they can only be cancelled at the main panel after either the glass has been replaced in the break glass contact or the thermal or smoke detctor has resumed its normal state.

Appendix 3 continued

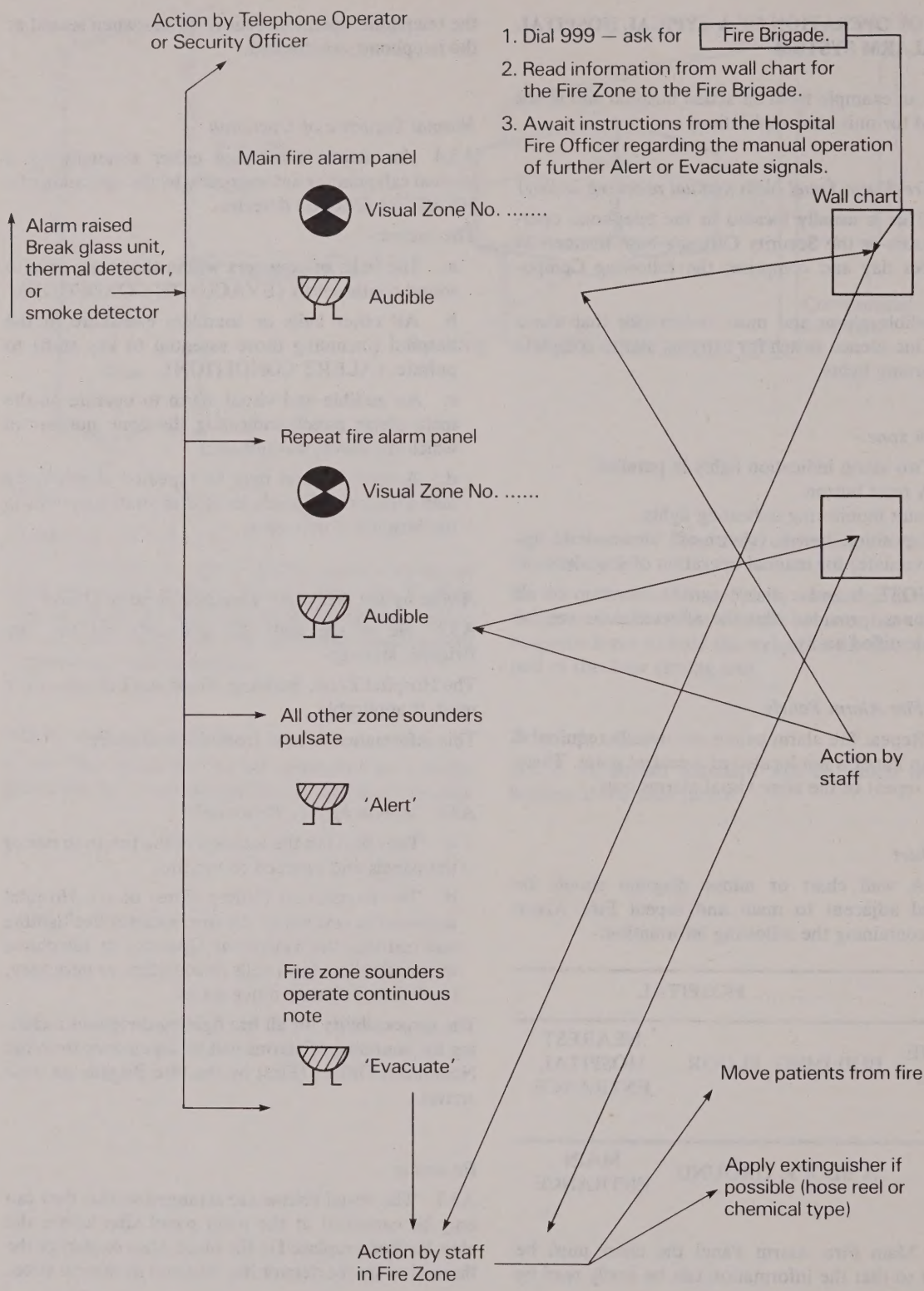

Fig A3-1

APPENDIX 4

TIME DIVISION MULTIPLEX FIRE ALARM SYSTEMS*

A4.1 The scale of the fire alarm systems required for many large hospitals, and the considerable cable lengths required led to the development of time division multiplex communication systems for hospital fire alarm purposes. Such systems have been used for many years in chemical and other large plants. The basis of the system is that instead of each zone of the system communicating to the central control panel via its own pair of wires a single pair of wires is laid around the site from zone to zone and back to the control panel. Each zone is given a time period in which it can communicate to the main control panel. It will be readily appreciated that the replacement of many pairs of wires spreading radially from the main panel by a pair of wires running circumferentially will when there are more than a very few zones, lead to substantial savings in wiring. Furthermore there may be savings by incorporating other alarms and condition monitoring on to the system. These will be offset to some degree by the greater cost of control equipment. It might be thought that such a system would lead to delays. In fact communication with each zone takes place in a time period of less than a millisecond and thus the system is scanned several times per second.

The Main Elements of a Typical TDM Fire Alarm System

A4.2 A time sharing system clearly depends on having a clock to measure time. In a time division multiplex system the clock is an electronic clock located at the central control which will be referred to as the master station. This electronic clock produces a series of pulses which are counted by pulse counters at the master station and at the zones, which will be referred to as slaves.

The Electronic Clock and its Pulses

A4.3 The electronic clock is the "heart" of the system. In the system being described the clock generates a square wave at the rate of 1,000 hertz (or alternatively one pulse every millisecond, one millisecond, equals 1,000 microseconds). Each pulse has an amplitude of 28 volts and lasts for 300 microcseconds. Hence there is an interval of 700 microseconds between the end of one pulse and the start of the next one. These two periods combine to form the "time slot" as shown below. It is in the 700 microsecond intervals that the opportunity is provided for the various slaves in the zones to make their replies upon being interrogated of scanned by the Master.

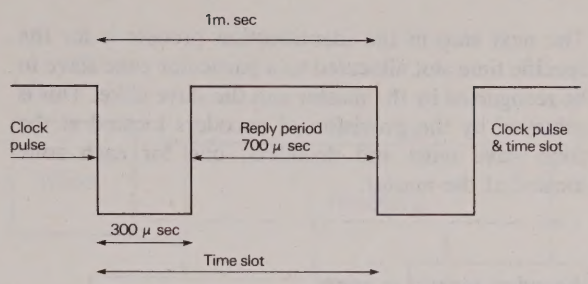

Fig A4-1 *The Time Slot*

A negative-going clock pulse is shown. The reader is probably more familiar with recognising positive-going pulses. However, this should present no difficulty as a change of polarity of the transmitted pulse is all that is involved. Overall circuit functioning is unaffected.

The master counter and slave counters

A4.4 Because a 2-core cable** only connects all zones to the master station each slave must know when the master is interrogating it. Conversely when a reply signal is sent by a slave the master must be able to identify the slave which has sent it. This is achieved by the allocation of specific time slots in the Scan to each zone slave. The third step in providing this identification facility is to be able to count the clock pulses accurately. There is a finite number of pulses, and therefore time slots, allocated for scanning the zone slaves. At the end of a scanning sequence it must be restarted and repeated ad infinitum. A master counter at the master station counts the clock pulses it receives. A further requirement is that all counters are in step with the master. This is done via the mixer at the master station which is associated with the clock and reset lines.

The mixer and the clock and reset lines

A4.5 One core of the 2-core and earth cable connecting the master with zone slaves is termed the clock line and the other core the reset line. It is arranged that pulses appear between the respective core and the sheath (earth) and not between cores.

The mixer is fed by clock pulse signals and signals from the master counter and works as a cross-inhibitor, that is to say if it feeds only clock pulses to the clock line and only the reset pulse to the reset line. A reset pulse is transmitted at the end of a scan only when the master counter has "filled up". The receipt of this pulse by the slave clocks ensures that they are restored to zero and the system is thus synchronised unless a "gross electronic fault" develops.

*This section is based on an article by Mr M Smith which originally appeared in HSE.

**When Central battery systems are coupled a 4 core cable would be needed.

The next step in the identification process is for the specific time slot allocated to a particular zone slave to be recognised by the master and the slave alike. This is achieved by the provision of encoders located at the zone slave units and decoders, one for each zone located at the master.

Encoders located at zones

A4.6 These are driven by the clock pulses derived from the master and with local signals derived from the slave counter. They are set up so that at the time slot nominated for the zone an output signal is provided which tests for a fault or fire condition in the particular zone.

Decoders located at the master

A4.7 These are driven by signals generated by the master clock and counter and replay signals derived from the zone slaves. Again the decoders are each set up to recognise signals associated with nominated zones only.

Enough of the major components in the TDM fire alarm system have been covered for a more detailed look to be taken at how such a system works and at the same time to introduce further components as the need arises. A very simple TDM fire alarm system will be described comprising of a master with 6 zone slaves, a mimic display and a single siren system.

How The System Works

A4.8 Since 6 zones have been selected initially 12 time slots will be required to be allocated on the basis of testing for a fault and a fire in each zone. Three other time slots are required, one to test for a gross electronic fault, one to sound the siren and one to reset the mimic diagram. So counters must be capable of counting from 0 to 15 and then resetting to zero to produce 16 time slots. Each counter will be made up from 4 bi-stable elements based on the Binary system of counting. Reference to fig A4-6 is suggested as a key to the whole sequence of events and allocation of the time slots.

Since there are 16 time slots for a full scan with a pulse repetition rate of 1,000 per second, the whole system is scanned 62 times per second.

Transmission of Clock Pulses and Reset from Master to slave etc (Figure A4-6 Lines 1 and 2)

A4.9 Clock pulses of 300 micro-seconds duration are sent over the clock line via the mixer (see fig A4-2) from the master clock to each zone unit (fig A4-3). A pulse reshaper squares up any pulses which have become distorted during transmission. They are counted and accepted at all zone slaves but only that zone associated with the allocated time slot through its encoder carries out an interrogation on itself for a fault or a fire condition. The reset pulse is sent over the reset line from the master clock via the mixer to each zone counter between time slots 15 and 0 to synchronise the system by ensuring all counters are reset to zero.

Return of reply pulses from zone slaves to master (figure A4-6 lines 3 and 4)

A4.10 It is part of the self checking feature of the TDM fire alarm system that reply pulses are arranged to be sent back over a clock and reset line simultaneously. A reply signal would be transmitted in the 700 microsecond part of the time slot reserved for each zone slave under interrogation. Reference to lines 3 and 4 of fig A4-6 shows the situation where there is not a gross electronic fault, no zone has a fault or a fire, and the siren is not sounding and the mimic is not illuminated. There is therefore a complete set of reply pulses sent back, and all is well.

Occurrence of gross electronic fault on system (figure A4-6 lines 5 and 6)

A4.11 If somehow there exists a rogue reply pulse on the clock and reset lines when they should be clear, this is probably due to a counter or encoder being out of step under a fault condition. This condition is tested for in slots 0 and 8.

Connected to the clock and reset lines at the master station there is a comparator. This is a 'gate' circuit which passes a signal only if the same signal is present on both the clock and reset lines. Lines 5 and 6 of figure A4-6 show this to be the case.

A twin decoder at the master is set up to respond to signals received from the comparator in time slots 0 and 8 (fig A4.2). The output from the decoder lights the gross electronic fault lamp via a lamp drive circuit. It will be noted that there is no encoder anywhere associated with these two time slots.

Occurence of a fault in zone D (Figure A4-6, lines 7 and 8)

A4.12 In each zone there exists a fault/fire discriminator which can recognise a fault signal or fire signal (fig A4-3). On one side this discriminator is connected to a local zone fire alarm circuitry and on the other to a fault signal generator and fire signal generator. The zone twin encoder is also connected to the fault and fire signal generators.

If a fault occurs in Zone D the discriminator signals the fault signal generator. However nothing further occurs until at the appropriate time slot allocated to the zone for the purpose, an interrogation is carried out by a second signal from the encoder. At this point the zone fault signal generator removes the reply signal normally passed to the buffer amplifier and the clock and reset lines (line 7 and 8 of figure A4-6). The buffer amplifier is another gate circuit allowing one-way passage of

Master Station

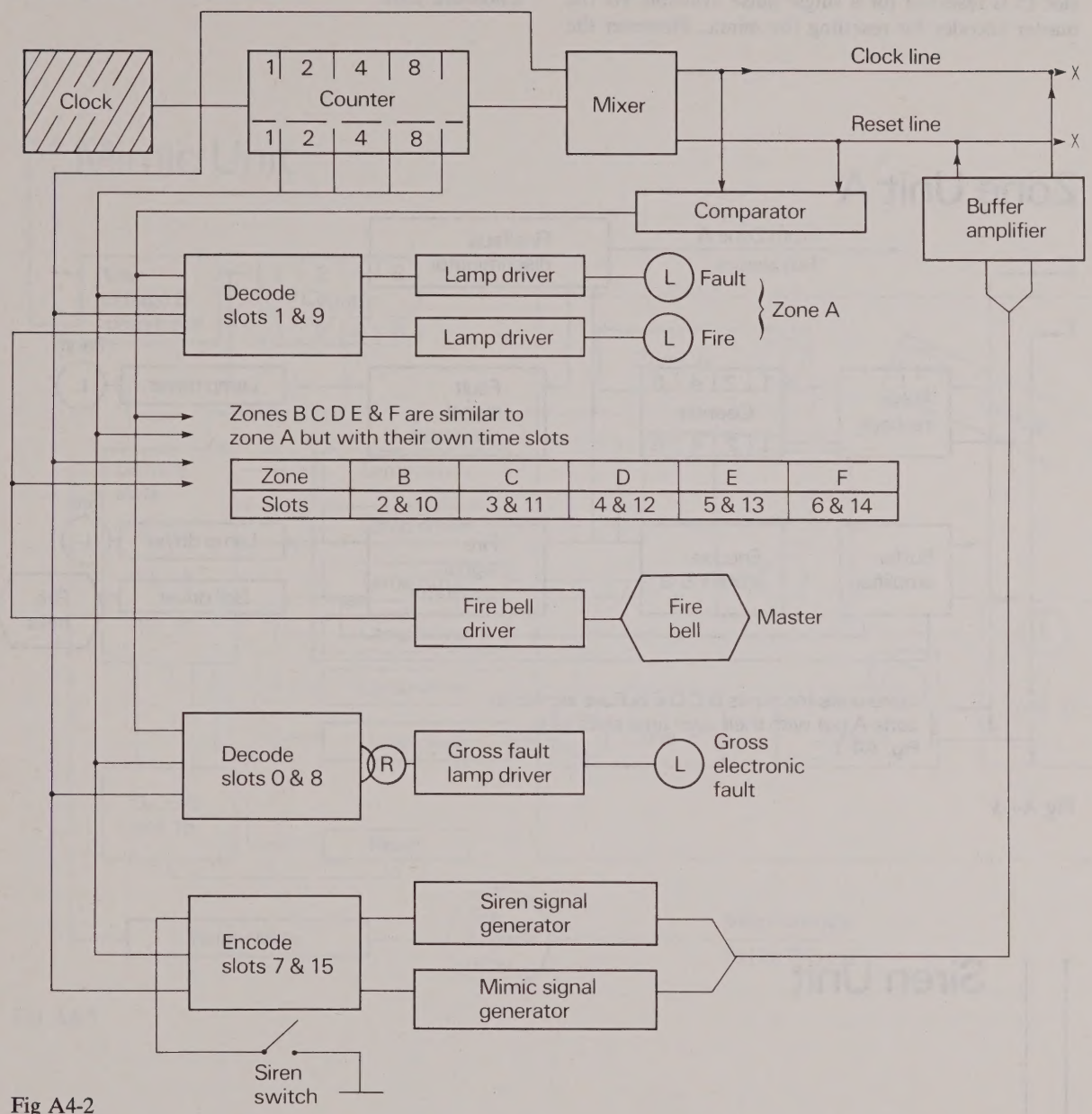

Fig A4-2

signals only. A communication path exists for the duration of this time slot between the zone encoder and the master decoder for the same slot.

At the zone D slave unit a lamp driver lights the fault lamp (fig A4-3). At the master, via the comparator, and in conjuction with the master clock counter and the decoder in time slot 4, the fault lamp for zone D is lit via the lamp driver. (Fig A4-2).

Occurence of a fire in Zone B (Figure A4-6 lines 9 and 10

A4.13 The procedure for this is similar initially to that for the faults considered in zone D. Now, at the time slot allocated for the purpose ie 10, the zone fire signal generator removes the reply pulse. The zone encoder communicates with its companion decoder at the master and the zone B fire alarm light at the master is illuminated (fig A4-2). Also at the master station the fire bell is sounded via its driver circuit, the remote mimic unit is illuminated for zone B via its own decoder which also actuates the telephone line alarm to the fire service (fig A4-5).

Siren and Mimic Units

A4.14 An encoder at the master via the siren signal generator, a buffer amplifier and the clock and reset lines communicates with a decoder at the siren unit (figure A4-4) in time slot 7 thus driving the siren.

Appendix 4 continued

A mimic diagram when fire occurs illuminates. Time slot 15 is reserved for a single pulse available via the master encoder for resetting the mimic. However the master cannot be restored until the full system registers a non-fire state.

Zone Unit A

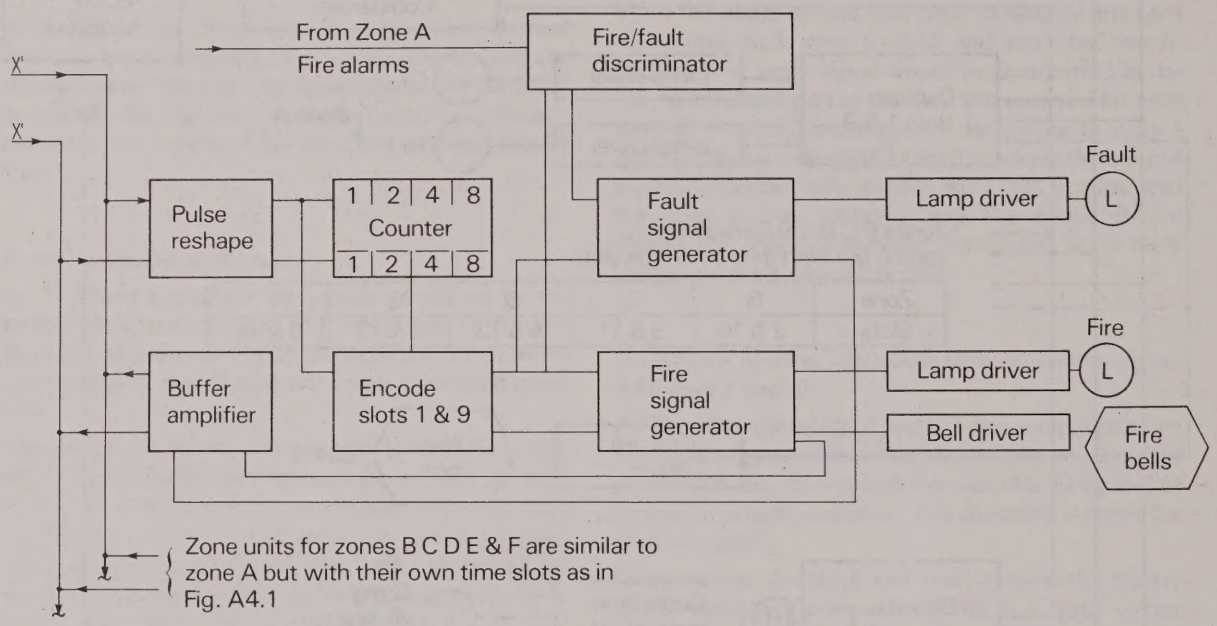

Fig A4-3

Siren Unit

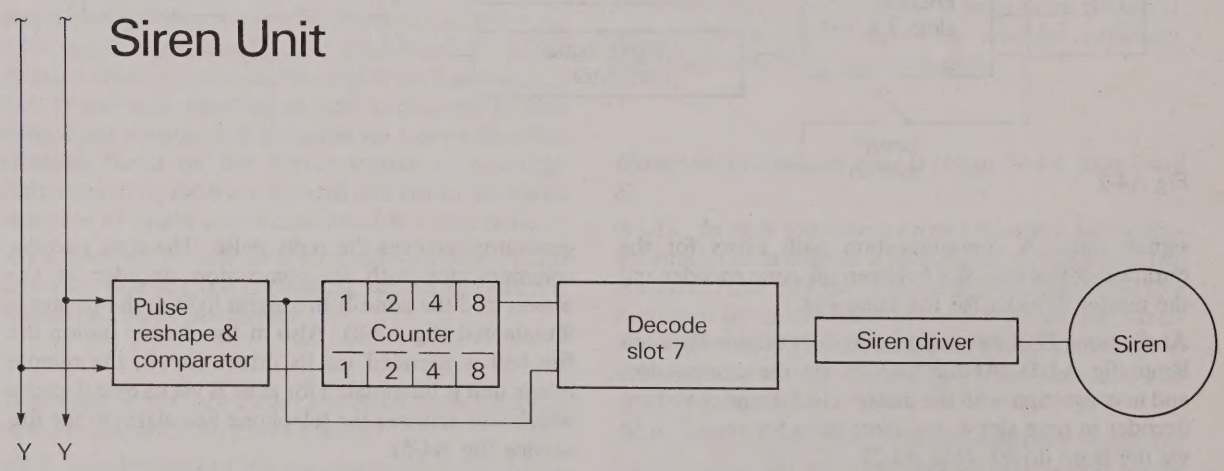

Fig A4-4

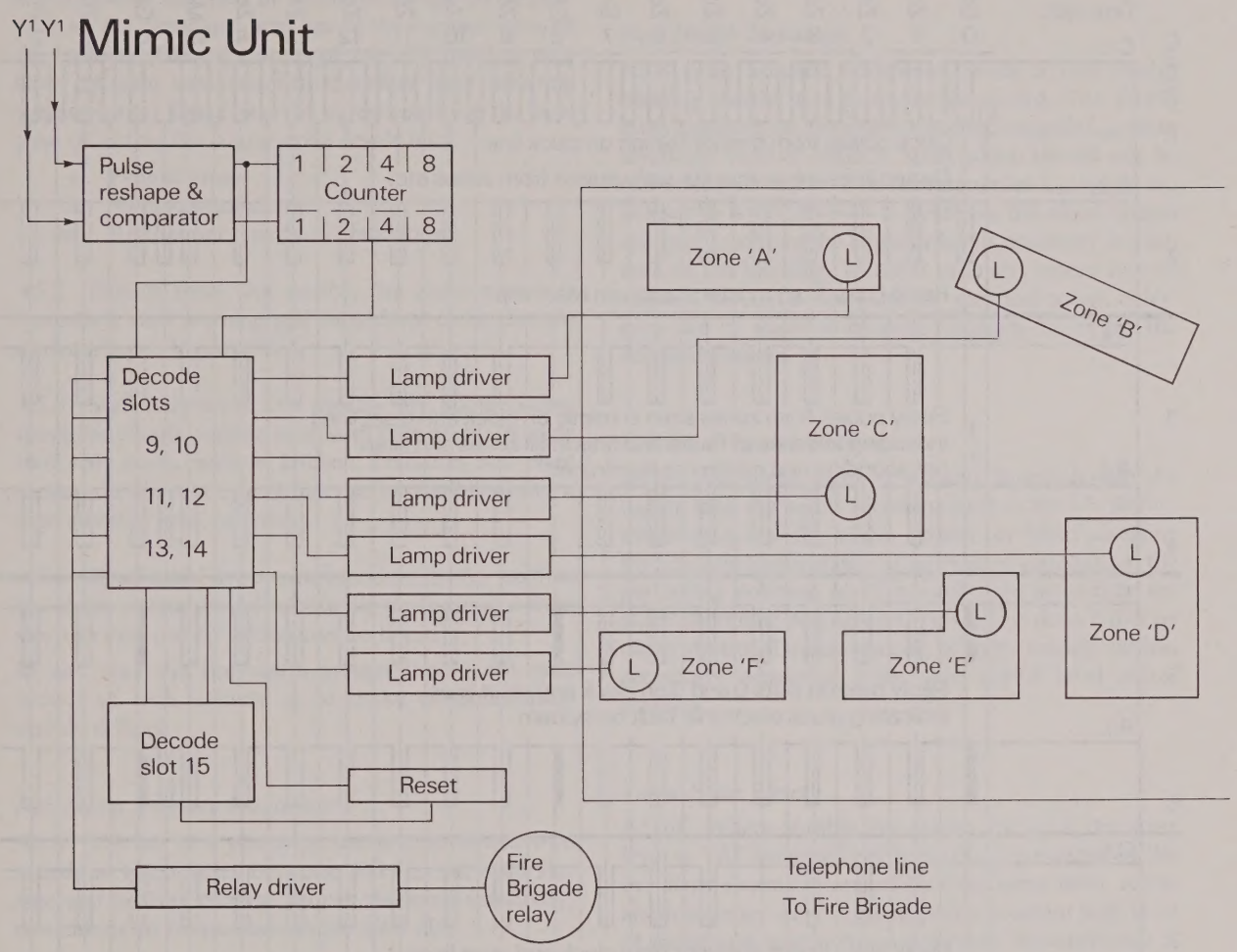
Y1 Y1
Mimic Unit
Pulse reshape & comparator
1 2 4 8
Counter
1 2 4 8
Decode slots
9, 10
11, 12
13, 14
Lamp driver
Lamp driver
Lamp driver
Lamp driver
Lamp driver
Lamp driver
Decode slot 15
Reset
Relay driver
Fire Brigade relay
Telephone line
To Fire Brigade
Zone 'A'
L
Zone 'B'
L
Zone 'C'
L
Zone 'D'
L
Zone 'E'
L
Zone 'F'
L

Fig A4-5

Appendix 4 continued

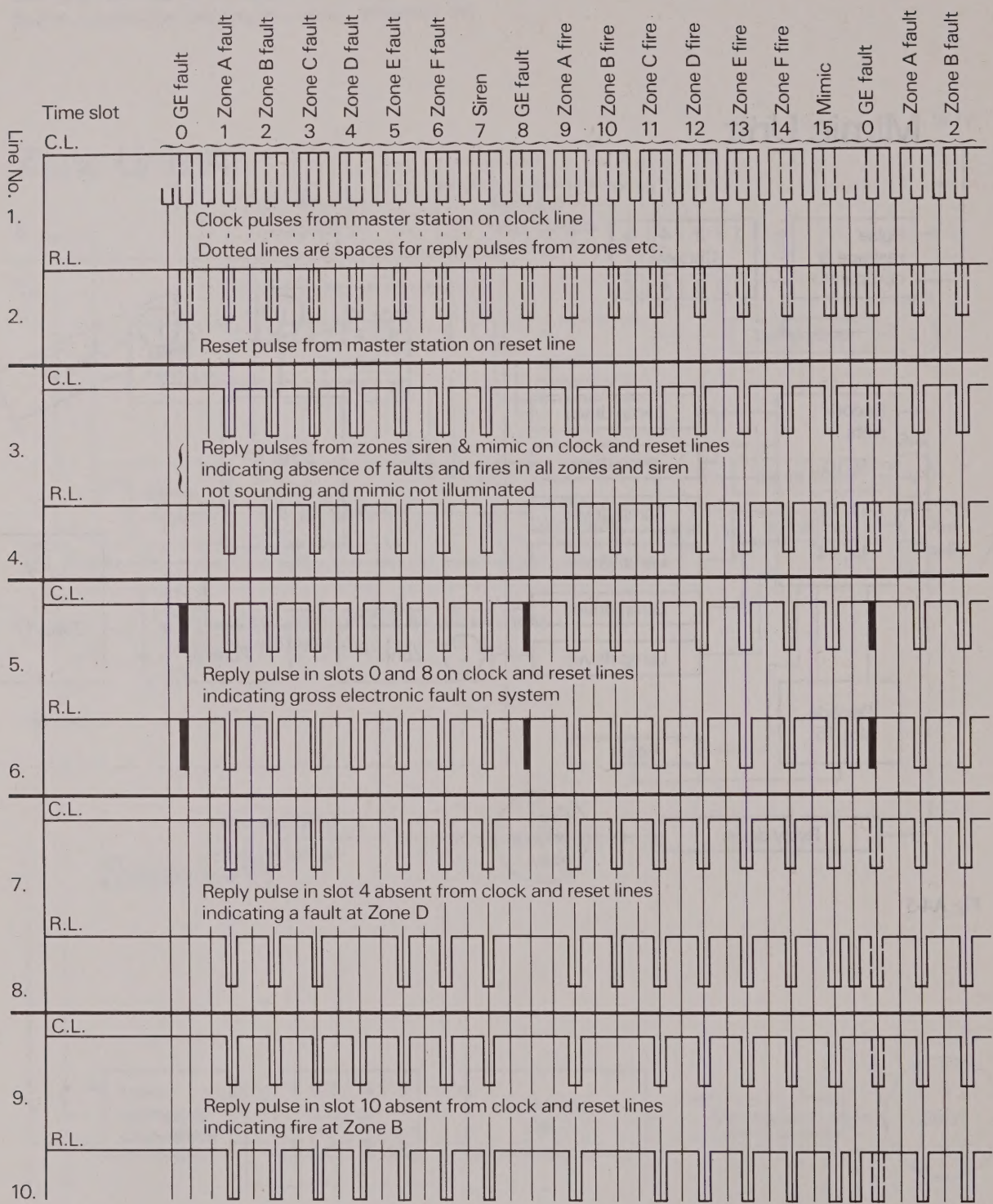

Fig A4-6

APPENDIX 5

ACOUSTIC RECOMMENDATIONS FOR AUDIBLE FIRE ALARMS

General

A5.1 The acoustic requirements of the audible fire alarm system installed in health buildings are dependent on the occupancy and use of the various areas of the building. Different areas of a health building may have different uses and will therefore have differing requirements. These may be categorised for the purpose of setting fire alarm noise levels into:

i. Patient areas.
ii. Staff only areas.
iii. Residential type accommodation.

A5.2 Patient areas. An audible fire alarm system is basically a staff warning and should not cause distress or disturbance to patients.

A5.3 Staff only areas. An audible fire alarm system should be clearly audible in all staff only areas. In some staff only areas, such as kitchen, laundries and plant rooms, the fire alarm will have to be audible above a high ambient level of noise.

A5.4 Residential type accommodation. An audible fire alarm system should sufficiently rouse persons from sleep so that correct action can be taken.

In any area the fire alarm system should not emit sounds of such volume as to make communication unduly difficult.

Fire Alarm Sounder Frequency

A5.6 The ear of a young person is most sensitive to sounds at frequencies between 500 Hz and 8000 Hz. Age and hearing damage reduce the ear's sensitivity, particularly to frequencies above 2000 Hz.

Fire alarm sounders are often situated in corridors and are expected to serve surrounding rooms. Dividing walls and partitions will attenuate sound. In general, the higher the frequency of the sound the greater will be the attenuation. This suggests that the fire alarm sounder frequency should ideally lie in the range of 500 Hz to 1000 Hz.

If a two tone alarm is used, at least one of the two major frequencies should lie within this range.

Fire Alarm Sounder Noise Levels

The Notional level

A5.7 An environmental noise can be defined by a noise level which is exceeded for 10 per cent of some period of time. This level is termed the L_{10} and is commonly used to describe health building acoustic environments. It is measured in "A" weighted decibels (dBA). This period may be 1 hour, 12 hours, duration of a clinic, or some other period of time which adequately describe the acoustic environment.

Let the L_{10} during the noisiest period, which will normally be the daytime in wards and day clinics, be termed the notional level. A fire alarm should be at least 5dBA above the notional level to be clearly audible 24 hours a day.

New Health Buildings

A5.8 The acoustic conditions inside a new health building should be a factor in the design. The DHSS gives guidance on noise levels and recommeds L_{10} noise levels for various hospital areas which should not be exceeded, see A5.17. The recommended L_{10} levels can be used as notional levels to guide the fire alarm system designer in setting the sounder levels necessary in each area of the building. In other instances where recommended levels do not exist for specified areas, reference can be made to existing buildings to predict the acoustic climate.

Existing Hospital Buildings

A5.9 The noise level in existing hospitals may be higher than the levels recommended in A5.17. Before installing a new fire alarm system, or when assessing the acoustic performance of an existing installation, the pertaining notional level in each area served by the alarm should be determined. This can be done either by direct statistical measurement, or more readily but less accurately estimated from spot sound level meter readings.

Tonal Noise Level

A5.10 Where audible fire alarms are used, the noise level in "A" weighted decibels (dbA) produced by the fire alarm in area is termed the tonal noise level. A fire alarm sounder will normally emit a constant high level of sound in a narrow frequency band. Measurement of the tonal noise level in an area can be made by taking spot readings with a sound level meter.

Communication

A5.11 Generally, wherever practical, the fire alarm system should not be so loud as to prevent communication. In an area where a fire alarm is producing a tonal noise level of 75 dBA verbal communication would be reduced to 2m when shouting and telephone use would be difficult. The noise levels from fire alarms or other sources in fire assembly areas should not prevent verbal communication. A maximun level of about 57 dBA is desirable in assembly areas.

Patient Areas

A5.12 Verbal communication is important in a ward area where patients may need reassurance or instructions from staff. With a tonal noise levels of about 60 dBA conversations will be relaxed and telephone use

satisfactory. Tonal noise levels of 60 dBA or greater should not be used except where the notional level in a patient area is more than 50 dBA, eg in general waiting areas.

Staff Only Areas

A5.13 Only in inherently noisy areas such as kitchens and plant rooms should tonal noises above 75 dBA be allowed. The frequency of the sounder should differentiate the fire alarm from other systems.

Staff Residencies

A5.14 The fire alarm should produce a tonal noise level of at least 30 dBA above the notional level to ensure adequate arousal. This may lead to noise levels in excess of those required for efficient verbal communication.

Other Residential Accommodation

A5.15 The fire alarm should produce a tonal noise level of at least 30 dBA above the L_{10} during the sleeping period. This may lead to noise levels in excess of those required for efficient verbal communication. Operational considerations, such as constant staff attendance, may allow certain residential accommodation to be treated as in patient areas A5.12. The fire alarm would be designed to arouse staff.

Siting a Fire Alarm Sounder

A5.16 Sounders should be sited so that adequate noise levels are obtained in each area served by the alarm system. A large number of quieter sounders rather than a few very loud sounders may be preferable to prevent noise levels in some areas becoming too loud. In siting sounders in corridors to serve surrounding rooms account must be taken of the attenuation at the sounder frequency of any dividing elements. It is unlikely that sounder noise levels in a room will be satisfactory if more than one dividing wall, or door, separates it from the nearest sounder. In particular, fire doors are solidly constructed and consequently do not readily transmit sound. At least one sounder per fire compartment will be necessary.

List of recommended maximum notional levels for various areas

A5.17 Spaces which are not sensitive to noise, such as television rooms and kitchens, are not included in the following list.

i. The noise levels specified in current DHSS Building Notes, Technical Memoranda and Design Guides which have been brought up-to-date since 1972.
ii. Large committee rooms, lecture theatres: 35 dBA.
iii. Private offices, small committee rooms, seminar rooms, libraries: 40 dBA.
iv. Wards: 40 to 45 dBA.
v. Medium sized offices, laboratories where no machines are used, bedrooms of staff residences: 45 dBA.
vi. Operating theatres and treatment rooms: 45–55 dBA.
vii. Outpatient areas: 50 dBA where conversations are held. In some diagnostic areas a lower noise level is desirable.
viii. General offices, laboratories, dining areas: 55 dBA.
ix. Typing Pools: 60 dBA.
x. General waiting areas: 60 dBA.
xi. Industrial areas, maxium 85 dBA.

Appendix 6

BIBLOGRAPHY

1. BS 5839 Fire Detection and Alarm Systems in Buildings, Part 1 Code of Pratice for Installation and Servicing, 1980

2. BS 3116 Automatic Fire Alarm Systems in Buildings, Part 4 Control and Indicating Equipment.

3. BS 5364 Manual Call points for Electrical Fire Alarm Systems, Part I Frangible Cover type.

4. BS 5445 Components of automatic fire detectors system, Part 5 Heat sensitive detectors — point detectors containing a static element.

5. BS 5446 Components of automatic fire alarm systems for residential purposes. Part I Point-type smoke detectors.

6. Home Office Manual of Firemanship Fire Protection of Buildings Book 9, Fire Protection of Buildings London HMSO 1975.

7. Parkin PH and Humphreys HR, Acoustics, noise and buildings, London 1958, Faber and Faber.

8. Langdon Thomas G J, Fire Safety in Buildings. London 1972 Faber and Faber.

9. Underdown GW, Practical Fire Precautions. London 1971 Gower Press.

10. Kennedy RH, Riley KWP and Rogers SP. A study of the operation and effectiveness of fire detectors installed in the bedrooms and corridors of residential institutions, BRE Current Paper 26/78.

11. Eastwell AS, Calculation of the effectiveness of Corridor smoke detectors in detecting fires in adjoining rooms. Fire Prevention Science and Technology No 20, November 1978.

12. Rules of the Fire Offices Committee for Automatic Fire Alarm Installation, 11th Edition 1973. FOC London 1973.

13. Regulations for the Electrical Equipment of Buildings Fifteenth Edition. Institution of Electrical Engineers.

14. Automatic Fire Detection Symposium No 6 1972. DOC and FOC JFRO BRE London HMSO 1974.

15. The Automatic Detection of Fire in Buildings, Proceedings of Autumn Symposium 1962, DSIR and FOC SFRO 1962.

16. Chandler SE, Some Trends in Hospital Fire Statistics, BRE Current Paper 67/78.

17. Smith M, TDM Fire Alarm System, DHSS, HSE Jan 1974.

Appendix 7

RELEVANT BRITISH STANDARDS

BS 476 Fire tests on building materials and structures.

BS 800 Specification for radio interference limits and measurements for equipment embodying small motors, contacts, control and other devices causing similar interference.

BS 1635 Graphical symbols and abbreviations for fire protection drawings.

BS 3116 Automatic fire alarm systems in buildings.

BS 4422 Glossary of terms associated with fire.

BS 4607 Non-metallic conduits and fittings for electrical installations.

BS 5274 Fire hose reels for fixed installations.

BS 5306 Code of practice for fire extinguishing installations and equipment on premises.

BS 5345 Code of practice for the selection, installation and maintenance of electrical apparatus for use in potentially explosive atmospheres (other than mining applications or explosive processing and manufacture)

BS 5364 Specification for manual call points for electrical fire alarm systems.

BS 5423 Specification for portable fire extinguishers.

BS 5445 Specification for components of automatic fire detection systems.

BS 5446 Specification for components of automatic fire alarm systems for residential purposes.

BS 5467 Specification for armoured cables with thermosetting insulation for elecrticity supply.

BS 5588 Code of Practice for fire precautions in the design of buildings.

BS 5839 Fire Detection and Alarm Systems in Buildings.

BS 6004 PVC-insulated cables (non-armoured) for electric power and lighting.

BS 6007 Rubber-insulated cables for electric power and lighting.

BS 6207 Mineral insulated cables.

BS 6231 Specification for PVC-insulated cables for switchgear and control gear wiring.

BS 6346 PVC-insulated cables for electricity supply.

BS 6746 PVC-insulation andsheath of electrical cables.

BS 6899 Specification for rubber insulation and sheath of electric cables.

Index

Subject	*Paragraph No.*
A	
ABC System (Alarm by Carrier)	3.3
Acoustic Recommendations	4.1.7, A5
Advanced Multiplexing Techniques	6.2.11
Alarm(s)	
Alert	6.1.11
Evacuate	6.1.11
Indication	6.1.19, 7.12
Sensing Unit	A1
Signals	6.1.17, A1
Silence	6.1.11
Sounders	6.1.5, 6.1.11, 6.1.14, 6.1.15, 6.2.4, 6.2.10, 6.3.1, 7.12, 8.3, 8.6, 8.8, A1.2
Sounder Silencing	6.1.15
Testing	4.1.7, 8.5
Two Stage	4.1.3, 4.1.4
Alert	
Alarm	6.1.11
Condition	A3.4
Signal(s)	4.1.4, A3.6, A3.7
Alkaline Batteries	6.2.1, 6.2.2
Americium 241	8.24, A2.1
Annunciator Panel(s)	7.4, 7.12
Approved Central Fire Alarm Depot	3.2
Audible	
Alarm(s)	4, 8.12, A1.9 A3.1, A3.4
Fire Alarm(s)	4.17, A5
/Visual Alarm	A2.10
/Visual Pulsing Times	7.12
Automatic	
Detection	5.2.18, A6
Detectors	2.3, 5.2.14 (Table 4) 6.2.1, A1.9, A6
Door Closers	2.1
Door Holders	5.2.14 (Table 4)
Fire Detection System	8.16, A6, A7
Monitoring	6.1.5
Silencing	4.1.6
Automatically Dialled Central Station	3 (Table 1)
Automotive Batteries	6.2.1
B	
Batteries	6.2.1, 6.2.3, 7.12, 8.10, 8.11, 8.13, A1.6, A1.9
Automotive	6.2.1
Charging Rate	8.14
Float Charged	6.2.3
Maintenance	8.10
Nickel Alkaline	6.2.1, 6.2.2
Plante Lead/Acid	6.2.1, 6.2.2

Subject	*Paragraph No.*
Battery	
Capacity	6.2.3
Chargers	6.2.3, A1.6, A1.9
Charging Equipment	8.14
Charger Failure Alarm	A1.9
Charge Fail Lamp	A1.9
Charging Rates	7.2, 8.14
Life	6.2.1, 6.2.3
Rooms/Cubicles	8.15
Voltage	2.3
Beam Detectors	5.2.14, 8.19
Bell(s)	4.5, A2.10, A3.4, A3.6
Bibliography	A6
Bimetallic Heat Detector	A2.6
Binary System	A4.8
Blower Heater	8.17
Breakable Glass Covers	6.2.7
Break Glass	
Contacts	A1.9, A3.7
Systems	5.1.1
Unit(s) (Call Points)	5.1.2, A1.9, A3.7
" Impact Type	5.1.2
" Steady Force Type	5.1.2
Bridging Resistor	A1.6
British Standards	1.3, 5.2.13, 6.1.1, 7.8, 8.29, A2.17, A7
Buzzer	4.2.1

C

Cables	6.3.1, 7.2, A7
Installation	7.2
Insulation	7.2, 7.9
MICS	6.3.1
Call Point(s)	5.1.1, 5.1.3, 5.1.6, 6.1.5, 8.7, A1, A2.9, A6
Weather Proof	5.1.4
Central	
Alarm Relay Station	8.4, 8.8
Battery System	A4.5
Control Panel	6.2.8, A4.1
Equipment	6.1.20
Exchange	3 (Table 1)
Receiver	3.3
Chargers	6.2.3, A1.6, A1.9,
Charging Rates	7.2, 8.14
Circuit Diagrams	8.3
Combustion	5.2.23
Commissioning	1.1, 4.1.7, 7, 7.1, 7.2, 7.3, 7.6, 7.7, 7.12, 8.1
Communication links with Fire Brigade	3(Table 1)
Compartments	2.2
Connectors	6.2.5
Control and Indicating Equipment	5.2.8, 5.2.12, 6, 6.1.3, 6.1.18, 8.8, A6
Equipment	2.2, 6.1.1, 6.1.2, 6.1.19, 6.1.20, 6.2.8, 6.2.9, 6.3.1, 8.8, A4.1

Subject	*Paragraph No.*
Functions	6.1.11
Panel	2.1
Sounder	8.8
Corrosion	5.2.11
D	
Department of the Environment (DOE)	A2.1
Detector(s)	5.6, 7, 8, A1, A2
Beam	5.2.14, 8.19
Choice	5.2.14 (Table 4)
Classification	5.2.14(Table 3)
Cleaning	5.2.10, 5.2.11, 5.2.12, 7.10, 7.11, 7.12, 8.21, 8.22, 8.23
Corrosion	5.2.11
Design	5.2.6
Fixed Temperature	5.2.4, 5.2.14(Table 2), A2.4
Flame	5.2.14 (Table 2)
Fusible Element	5.2.7, 5.2.11, 8.18
Heat	5.2.1, 5.2.2, 5.2.11, 5.2.14 (Table 2), 5.2.15, 5.2.16, 8.17, A2.4, A2.6, A3.4
Infra Red	5.2.14 (Table 2)
Installation	5.2.5
Ionization	5.2.14, 8.23, 8.26, 8.29, 8.30, A2.1
Light Scatter	5.2.14, A2.2
Lines	6.1.3, 6.1.5, 6.1.7
Line Type	5.2.16, A2.8
Maintenance	5.2.5, 5.2.6, 5.2.11
Non-Fusible Sensing Element	5.2.7
Optical Beam	5.2.15, 5.2.17, A2.3
Optical Scatter	5.2.10, 5.2.14 (Table 2)
Performance	5.2.13, 5.2.14 (Table 2)
Photo-electric Light Scatter	8.22
Point Type	5.2.5, 5.2.12, 5.2.15, 5.2.16
Reliability	5.2.13
Sensitivity	5.2.2, 5.2.3, 5.2.11
Siting	5.2.20, 5.2.24
Smoke	5.2.1, 5.2.2, 5.2.14 (Table 2), 5.2.15, 5.2.16, 5.2.18, 5.2.21, 8.16, 8.21, 8.22, 8.28, 8.29, A1.9, A2.1, A3.4, A3.7
Smoke Chamber	A2.2
Spacing	5.2.20
Spares	8.29
Testing	5.2.6
Thermal Turbulence	5.2.14 (Tables 2 and 3)
Types	6.1.3
Ultra Violet	5.2.14 (Table 2 and 3)
Detection	
Amplifier	8.26
Chamber	8.22, 8.26, A2.1
Chamber Plates	8.27

Subject	*Paragraph No.*
Direct Link(s)	3.1
Disposal of Ionization Detectors	8.30
Door	
Closer	A2.13, A2.14
Holder(s)	6.1.12, A2.11, A2.13, A2.17
Application	A2.15
Installation	A2.16
Magnetic	A1.9, A2.11, A2.13
Pneumatic	A2.14
Release Locks	A2.12
Retainer Units	A2.11, A2.15, A2.16
Dummy Load	8.12
E	
Earth	
Continuity	7.10
Fault	6.1.7
Loop Impedance	7.10
Earthing Tests	7.2, 7.10
Edge Connectors	6.2.5
Electronic Sounders	4.1.5, A2.10
End of Line Resistor	A1.9, A2.8
Environmental Noise	4.1.7, A5.7
Escape Routes	5.2.17
Estmancode	8.1, 8.2
European Insurance (CEA) Standard	5.2.2
Eutectic Alloy Fuse	A2.5
Evacuate Alarms	6.1.11
Condition	A3.4
Signal	4.4, A3.6, A3.7
Evacuation	1.4
Extinguisher(s)	A3.7, A7
F	
False Alarm (s)	5.2.2, 5.2.14, 5.2.15, 5.2.16, 5.2.21, 5.2.24, 7.7, A1.6
Fault	
Conditions	6.1.9
Indication	7.12
Indicators	6.1.9
Monitoring	6.2.5, A3.1
Sensing Unit	A1.1, Al.4, A1.5
Signal	A1.4, A1.5, A1.6
Warning(s)	5.2.12, 6.1.4, 6.1.5, 6.1.6, 6.1.20, 6.2.5, 8.8
Filters (Photo-electric Detector)	8.22
Field Effect Transistor	8.26
Filament Lamps	6.1.8, 6.1.9
Fire	
Alarm(s)	1.4, 4.1.1, 4.1.2, 6.2.5, 6.2.8, A1.9, A2.7, A2.14, A4.1, A5
Alarm Circuits	A1, A2.1, A2.4, A2.6
Alarm Control	6.1.2

Index contd.

Subject	*Paragraph No.*
Alarm Equipment	3(Table 1)
Alarm Installations	8.1
Alarm Noise Levels	A5.1
Alarm Panel	2.1
Alarm Repeat Panel	A3.2
Alarm System (s)	1.1, 1.2, 1.5, 2.1, 4.1.7, 6.2.3, 6.2.11, 6.3.1, 7.2, 7.7, 8.7, A1.1, A1.7, A2.7, A3, A5.3, A5.9
Alarm Testing	6.1.16
Alarm Zones	2.2, 2.3, 4.1.4
Brigade	1.4, 3(Table 1), 3.1, 3.3, 3.5, 6.1.18, 8.4, 8.8, A3.5, A3.6, A4.13
Compartments	2.2, A5.16
Detectors	5.2.1, 8.16, A6
Drawing	8.7, A7
Doors	A1.9, A2.15, A5.16
Offices Committee	3.2
Precautions	1.5
Resistant	6.3.1
Service	3 (Table 1)
Signal	6.1.18
Station	3 (Table 1)
Zone (s)	2.2, 2.3, 6.1.11, A3.7
First Aid Fire Fighting	1.4
Fixed Temperature Element	5.2.1, A2.4
Flashing Light/Audible Units	4.1.5
Flashing Light Unit	4.2.1
Flow Diagrams	A1.7, A1.8, A1.9
Four Wire Non-Ring Circuit	6.1.5
Frangible Cover Call Points	A2.9, A6
Fuses	8.29
Fusible	
Element	5.2.7, 5.2.11, A2.5
Type Detector	8.18

H

Harwell Smoke Detector Tester	8.16
Health and Safety at Work Act	8.29
Heat	
Detector(s)	5.2.2, 5.2.11, 5.2.15, 5.2.16, 8.6, 8.17, A2.4, A2.6, A2.7, A3.4, A6
Bimetallic	A2.6
Fixed Temperature	5.2.4, 5.2.14 (Table 2), A2.4
Fusible Element	5.2.7, 5.2.11, 8.18
Line Type	5.2.16, A2.8
Pneumatic	A2.7
Point Type	5.2.5, 5.2.12, 5.2.15, 5.2.16
Rate of Rise	5.2.1, A2.4, A2.6
Thermal Turbulence	5.2.14, (Tables 2 and 3)
Sensitive Element	5.2.11
Shimmer	5.2.14
Heater	8.17

Subject	*Paragraph No.*
High	
Fire Load	5.2.14 (Table 4)
Fire Risk	5.2.19
Life Risk	5.2.19
Risk Areas	5.1.6, 5.2.18
Home Office	A2.1
Hose Reel	A3.7, A7
Hybrid Systems	6.1.1
I	
IEE Regulations	7.8, 7.9, 7.10
Indicating Equipment	6.1.2
Indicator(s)	6.1.8, 6.1.9, 6.1.10, 6.1.17
Fault	6.1.9
Filament Lamps	6.1.8, 6.1.9
Lamps	2.3, 5.2.6, 5.2.9
Light Emitting Diodes (LEDs)	6.1.8, 6.1.9
Mechanical Flag	6.1.8
Sector	6.1.19
Zone	6.1.19
Infa Red Detector	5.2.14 (Table 2)
Inspection	7.2, 7.8
Installation(s)	7, 7.1
Insulation	7.2
Tests	7.9
Intermittant	
Indication	6.1.10
Signal	4.1.3
Ionization	
Chamber(s)	5.2.10, 5.2.14 (Table 2), A2.1
Detector(s)	5.2.14, 8.23, 8.26, 8.29, 8.30, A2.1
Detector Disposal	8.30
Isolating Facility	6.1.16
K	
Key Operated	
Manual Call Units	5.1.5
Switches	6.2.7
L	
Lamp/Buzzer Unit	4.2.1
Lead Acid Battery(ies)	6.2.1, 6.2.2
Life Risk	5.2.14 (Table 4)
Light Emitting Diodes (LEDs)	6.1.8, 6.1.9
Light Scatter Detector	5.2.14
Limiting Resistor	A1.5, A1.6
Line Resistance	6.1.6
Line Type Heat Detector	5.2.16, A2.8
Lockable Covers	6.2.7
Log book	7.6, 7.7, 7.9, 7.10, 8.3, 8.4
Low Activity Sources	8.24
Low Risk Rooms	5.2.18

Index contd.

Subject	*Paragraph No.*
M	
Magnetic Door Holder	A1.9, A2.13
Main(s)	
Annunciator Panel(s)	7.4, 7.12
Control Equipment	6.2.8
Control Panel	7.5
Fail Buzzer	A1.9
Fire Alarm Control Panel	6.1.15, A3.1, A3.2, A3.3, A3.4
Supply Failure	8.10
Maintenance	1.1, 5.2.11, 5.2.21, 6.2.1, 6.2.3, 7.7, 8, 8.2, 8.3 A1.9
Manual(s)	8.2, 8.3, 8.10
Manual	
Call Point(s) [Units (s)]	5, 5.1.6, 6.1.13, 8.16, 8.20, A2.9, A3.4, A6, A7
Call Point Circuits	A1
Call Points(s) – Key Operated	5.1.5
Call Point(s) – Test Facilities	A2.9
Controls	6.1.10, 6.1.11, 6.2.6
Means of Escape	5.2.18
Mechanical	
Flag	6.1.8
Heat Sensing Element(s)	5.2.4
Ventilation	5.2.23, 5.2.24
Megger (500V)	7.9
Microprocessor Technology	6.2.11
MICS Cable	6.3.1
Mimic Diagram	A3.3, A4.8, A4.10, A4.14
Monitored	
Circuit (2 Wire)	5.2.12
Site	6.2.8
Multiplex System	3 (Table 1)
Mute	
Switch	A1.9, A3.1
Warning Light	A1.9
N	
Noise	4.1.2, 4.1.7, A5.1
Levels	A5.1, A5.7, A5.8, A5.9, A5.10, A5.17
Nominated Officer (Fire)	A3.6
Non-Fusible Sensing Element	5.2.7
National Noise Level(s)	4.1.7, A5.7, A5.8, A5.9, A5.17
Nurse Base	5.1.6
O	
Optical	
Beam Detector(s)	5.2.14, A2.3
Scatter Detector(s)	5.2.10
Overvoltage Protection	A1.9

Subject	*Paragraph No.*
P	
Panel	
Sector	6.1.20
Slave	6.1.21
Particle Size, Mass and Concentration	5.2.14, 8.16
Photo Cell Receiver	A2.3
Photo-Electric	
Cell	A2.2
Light Scatter Detectors	8.22
Planned Preventive Maintenance (PPM)	8.1
Plant Rooms	5.2.19
Pneumatic	
Heat Detector	A2.7
Door Holder	A2.14
Point Type Detector	5.2.5, 5.2.12, 5.2.15, 5.2.16
Smoke	5.2.12
Power Supply Equipment	6, 6.1.2, 6.2.4
Construction	6.2.5
Printed Circuit Board (PCB)	6.2.5
Protected Circuits	3.3
Public Switched Telephone Network	3.5
R	
Radioactive	
Source	8.27, A2.1
Substances Act	8.29
Substances, Storage of	8.29
Waste	8.24
Radio Interference Limits	A7
Radiological Safety Officer	8.24, 8.29, 8.30
Radium 226	A2.1
Record File	7.7
Reference Chamber	A2.1
Relay Circuit	6.2.6
Remote Manned Centre	6.1.17, 6.1.18
Repeat Fire Alarm Panel	A3.2, A3.3, A3.7
Reset	
Button	A3.1
Switch	5.2.8
Ring Circuits	6.1.4, 6.1.5
Routine Tests	7.7
S	
Sealed Cells	6.2.1
Sector	6.1.19
Indicator(s)	6.1.19
Panels	6.1.20, 8.4
Security Officers, Base	A3.1
Sensing Units	A1
Sensor	8.16
Signal to Remote Manned Centre	6.1.17
Silence	
Alarm	6.1.11
Control	6.1.15
Switch(es)	6.1.15, A3.1

Index contd.

Subject	*Paragraph No.*
Silencing	2.1, 6.1.10
Siren(s)	A2.10, A4.8, A4.10, A4.14
Slave Panels	6.1.21
Smoke	
Chamber	5.2.10
Dark	5.2.14
Detection	5.2.14 (Table 2), 5.2.15
Detector(s)	5.2.1, 5.2.2, 5.2.14, 5.2.15, 5.2.16, 5.2.18, 5.2.21, 8.16, 8.21, 8.22, 8.28, 8.29, A1.9 A2.1, A3, A6
Cleaning	8.21
Ionization Chamber	5.2.10
Long Beam	5.2.14 (Table 2)
Optical Scatter	5.2.1
Reference Chamber	A2.1
Sensitivity Adjustment	8.22
Light	5.2.14
Particle Size	5.2.14, 8.16
Solid State	
Circuits	6.2.6, A1.1
Components	6.2.6
Fire Alarm System	A1.1
Sound Level(s)	4.1.7, 4.2.1
Measurements	4.1.7
Meter Readings	A5.9, A5.10
Sound Pressure Levels	4.1.6
Sounder(s)	2.1, 4.1.2, 4.1.4, 4.1.7, 4.2.1, 6.1.10, 6.1.11, 6.1.15, 6.3.1, 7.12, 8.6, 8.7, 8.16, A2.10, A3, A5
Attenuation	A5.6
Frequency	A5.6
Spares	8.29
Special Control Equipment	6.2.8
Staff to Patient Ratios	2.3
Standby Generators	6.2.1
Standby Supplies	6.2.1, 6.2.9
Duration	8.9
Storage of Radioactive Substance	8.29
Structural	
Fire Compartments	2.2
Fire Precautions	5.2.18
Fire Sub-Compartments	2.2
Switches(es)	
Mute	A1.9, A3.1
Reset	5.2.8
Silence	6.1.15

T

Telephone(s)	5.1.1
Exchange	2.1
Lines	3 (Table 1), 3.1, 3.2, 3.3, 6.1.7, 6.1.17
ABC – Alarms by Carrier	3 (Table 1), 3.3

Subject	*Paragraph No.*
Autodialler 999	3 (Table 1)
999 System	3.4
Manual 999	3 (Table 1)
Private PO Line	3 (Table 1), 3.2
Private PO Line to Central Alarm Station	3 (Table 1), 3.2
VF System A	3 (Table 1), 3.1
Network	3 (Table 1)
Operators' Room	A3.1
Switchboard	A3.3
System	7.5
Traffic	3.5
Test	
Switch	6.1.13
Smoke	8.16
Testing	1.1, 5.2.6, 6.1.13, 6.1.17, 8
Equipment	8.3
Plan	8.7
Thermal Turbulence Detector	5.2.14 (Tables 2 & 3)
Thermistor	A2.7
Time Division Multiplex (TDM)	6.2.8, 6.2.9, A4, A4.7, A4.10
Tonal Noise Level	A5.10, A5.11, A5.12, A5.13
Trigger Device(s)	6.1.21, 7.12, 8.6, 8.16
Two Stage Alarm	6.2.10
Two Tone Alarm	A5.6
Two Way Radio	7.5
Two Wire Systems	6.2.10

U

Ultra Violet Detector	5.2.14 (Table 2)
Ultrasonic Cleaning Bath	8.24
Unmonitored	
Connections	8.4
Direct Line	8.4
Ring Circuits	6.1.14

V

Variable Resistance Device	A1.1
Ventilation Ducts	5.2.22
VF System A	3 (Table 1), 3.1
Visual Alarm(s)	4, A3.4
Voids	5.2.19, 5.2.21
Voltage	
Drop	6.2.4
Test	8.11, 8.12
Voltmeters	8.10

W

Warblers	4.1.4
Wall Chart	A3.3, A3.5
Wires	7.2
Wiring	6.3, 6.3.1, A7
Insulation	7.9

Index contd.

Subject	*Paragraph No.*
Z	
Zone(s)	2.2, 2.3, 4.1.3, 4.1.4 6, 7.5, 8, A1.9, A2.1, A3, A4
Circuitry	6.1.9, 6.1.11, 6.1.13
Control Units	8.8
Indication	7.12
Indicator	6.1.3, 6.1.19
Modules	6.1.3, 6.2.5
Sounders	A3.7

Printed in England for Her Majesty's Stationery Office by Linneys of Mansfield Ltd.
Dd 718207 C40 11/82

HER MAJESTY'S STATIONERY OFFICE

Government Bookshops

49 High Holborn, London WC1V 6HB
13a Castle Street, Edinburgh EH2 3AR
41 The Hayes, Cardiff CF1 1JW
Brazennose Street, Manchester M60 8AS
Southey House, Wine Street, Bristol BS1 2BQ
258 Broad Street Brirmingham B1 2HE
80 Chichester Street, Belfast BT1 4JY

Government publications are also available through booksellers

© *Crown copyright 1982*
First published 1982

ISBN 0 11 320795 6

CI/SfB
/41/42/(68.5)/ /